SG	SINGAPORE

Diagram / Parts List

P-91067

MAKTRAK DEEP COMPACT ORGANIZER

2026/07

(SG) P-91067 / MAKTRAK DEEP COMPACT ORGANIZER

P-91067

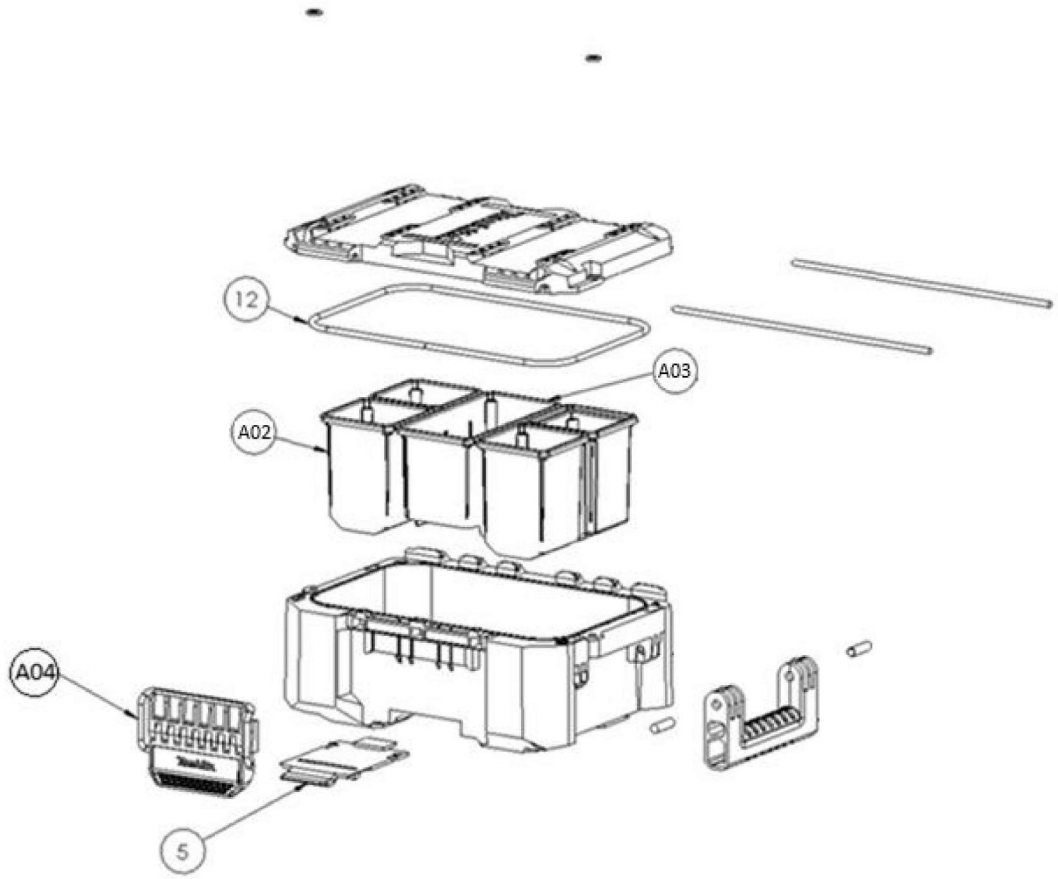

P-91067 Parts list

Item No.	Part No,	Description	Q'ty
5	PS00000036	Locking Cleat, Standard	1 PC.
12	PS00000035	Lid Gasket Seal, Compact	1 PC.
A02	T-92140	Organizer Bins, Deep Standard, 4pc	1 PC.
A03	T-92156	Organizer Bins, Deep Medium, 2pc	1 PC.
A04	T-92069	Latch Assembly, Medium	1 PC.

Optional accessory



Part No,	Description
T-92271	Upper Bin & Divider Set, Deep Standard, 4pk

SG SINGAPORE

P-91067 / MAKTRAK DEEP COMPACT ORGANIZER

Item	Sub	Parts No.	Parts Description	Qty	I/C	E/C No.	Close No.	Remark
001		DUMMY	DUMMY	1				

Interchange
O : Yes
X : No
< : the new part can be substituted for the current.
> : the current part can be substituted for the new.
S : Interchangeable as a set.