SG	SINGAPORE

Diagram / Parts List

MD00000003

CARRY TOOL DRAWER

2026/08

(SG) MD00000003 / CARRY TOOL DRAWER

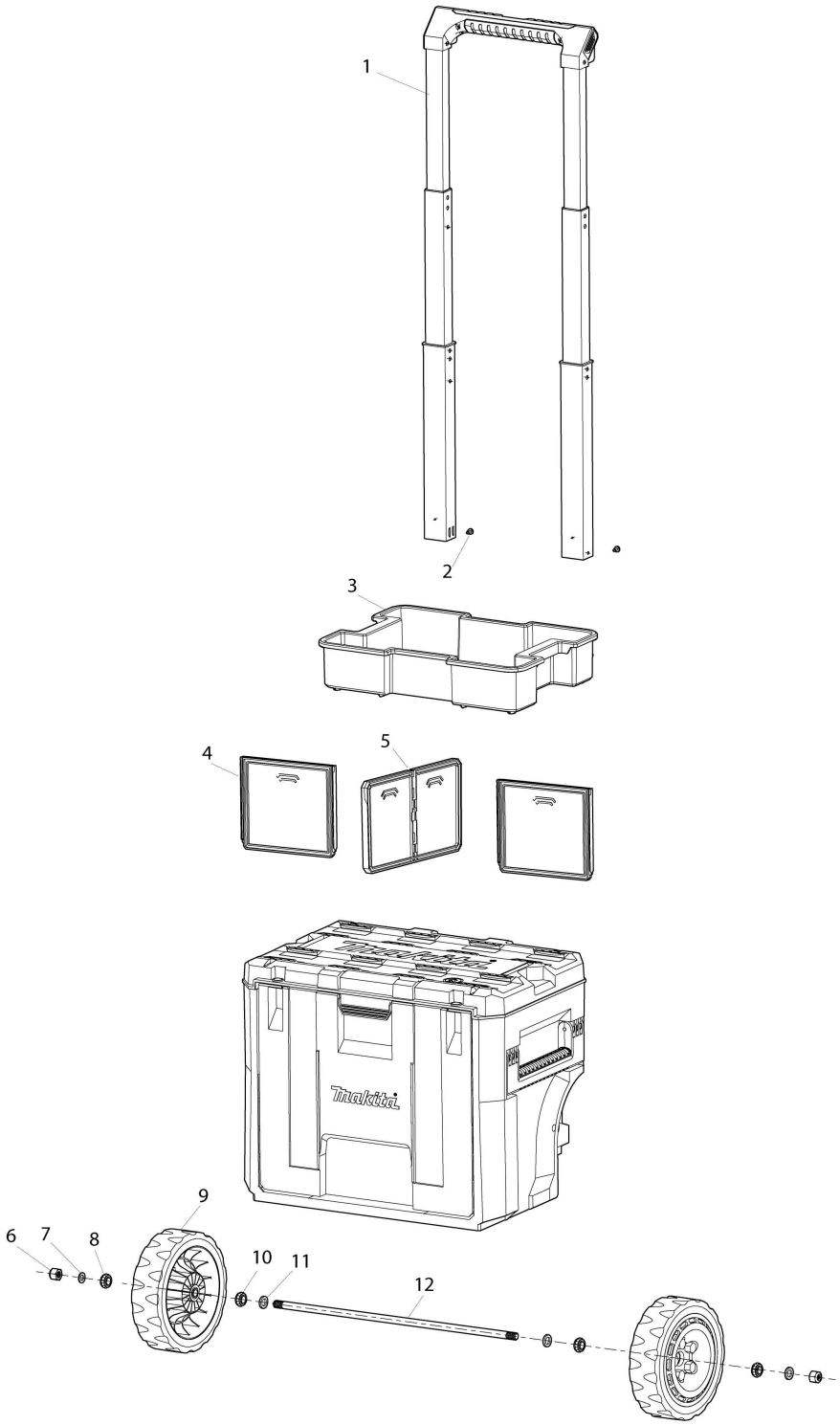

SG SINGAPORE

MD00000003 / CARRY TOOL DRAWER

Item	Sub	Parts No.	Parts Description	Qty	I/C	E/C No.	Close No.	Remark
001		MD00000030	TELESCOPIC HANDLE ASSY	1				
002		MD00000031	BIND HEAD TAPPING SCREW 5X10	2				
003		MD00000040	INNER TRAY	1				
004		MD00000041	PARTITION BOTH SIDE	2				
005		MD00000042	PARTITION CENTER	1				
006		MD00000035	HEX LOCK NUT M12	2				
007		MD00000036	FLAT WASHER 14.3	2				
008		MD00000037	FLANGED WHEEL BEARING 1/2"	2				
009		MD00000038	WHEEL ASSY	2			Y09762	
010		MD00000037	FLANGED WHEEL BEARING 1/2"	2				
011		MD00000036	FLAT WASHER 14.3	2				
012		MD00000039	AXLE SHAFT 12.7X552	1				

Interchange
O : Yes
X : No
< : the new part can be substituted for the current.
> : the current part can be substituted for the new.
S : Interchangeable as a set.