QA	

Diagram / Parts List

GA4593

115MM ANGLE GRINDER

2023/05

(QA) GA4593 / 115MM ANGLE GRINDER

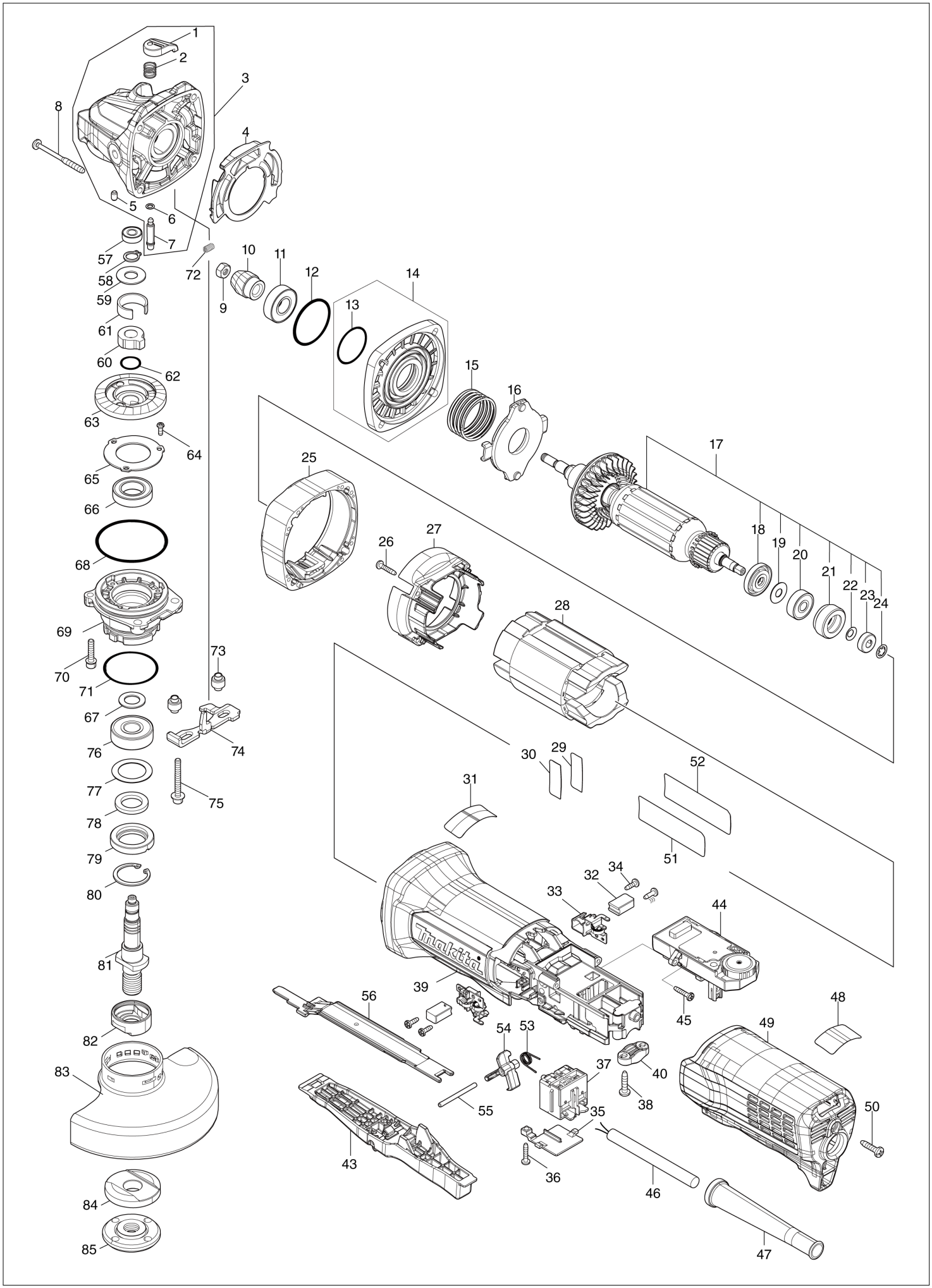

QA	

GA4593 / 115MM ANGLE GRINDER

Item	Sub	Parts No.	Parts Description	Qty	I/C	E/C No.	Close No.	Remark
001		453369-5	PIN CAP	1				
002		234057-1	COMPRESSION SPRING 8	1				
003		136770-6	GEAR HOUSING ASS'Y	1				
	D10		INC. 1,2,5-7					
004		413C06-1	DIFFUSER	1				
005		263002-9	RUBBER PIN 4	1				
006		213032-0	O RING 4	1				
007		256535-1	SHOULDER PIN 6	1				
008		266467-4	TAPPING SCREW 4X50	4				
009		252186-8	HEX. NUT M6	1				
010		227916-6	SPIRAL BEVEL GEAR 11	1				
011		211131-2	BALL BEARING 6001DDW	1				
012		422812-5	RUBBER PLATE	1				
013		213693-6	O-RING 27.5	1				
014		136771-4	GEAR HOUSING COVER ASS'Y	1				
	D10		INC. 13					
015		234230-3	COMPRESSION SPRING 33	1				
016		141515-9	BRAKE SHOE HOLDER COMPLETE	1				
017		511A44-6	ARMATURE ASS'Y 240V	1				
	D10		INC. 18-24					
018		681656-4	INSULATION WASHER	1				
019		253823-7	FLAT WASHER 7	1				
020		210027-4	BALL BEARING 627DDW	1				
021		422811-7	LABYRINTH RUBBER RING 22	1				
022		267756-0	WAVE WASHER 6	1				
023		688117-5	MAGNET SLEEVE	1				
024		259039-2	SELF LOCK 6	1				
025		413C05-3	SPACER	1				
026		266429-2	TAPPING SCREW 3X16	4				
027		413C08-7	BAFFLE PLATE B	1				
028		621A18-0	FIELD 220-240V	1				
029		807G78-4	CLEAR LABEL	1				
030		858X76-3	GA4593 SERIAL NO. LABEL	1				
031		898443-6	SJS2 MARK LABEL	1				
032		1910M3-7	CARBON BRUSH 264 SET	1				
033		644011-1	BRUSH HOLDER	2				
034		266007-8	TAPPING SCREW BIND PT 3X10	4				
035		413H00-3	SWITCH COVER	1				
036		266429-2	TAPPING SCREW 3X16	1				
037		650028-4	SWITCH FPC-2115T-0-02	1				
038		266326-2	TAPPING SCREW 4X18	2				
039		413G97-6	MOTOR HOUSING B	1				
040		687123-7	STRAIN RELIEF	1				
043		162B63-7	SWITCH LEVER COMPLETE	1				
044		620H29-4	CONTROLLER	1				
045		266429-2	TAPPING SCREW 3X16	2				
046		692021-2	POWER SUPPLY CORD 1.0-2-2.5	1				
047		682116-9	CORD GUARD	1				
048		8055D1-9	INDICATION LABEL	1				
049		413G99-2	REAR COVER C	1				
050		266326-2	TAPPING SCREW 4X18	1				
051		858X74-7	GA4593 NAME PLATE	1				
052		8055D2-7	CLEAR LABEL	1			DM148	
053		232753-5	TORSION SPRING 8	1				
054		413G96-8	ROLL LINK	1				
055		256375-7	ROD 3	1				
056		413G87-9	BRAKE LEVER	1				
057		210026-6	BALL BEARING 696ZZ	1				
058		961006-2	RETAINING RING S-10	1				
059		253180-3	FLAT WASHER 10	1				
060		327918-3	JOINT SLEEVE	1				
061		347911-1	C TYPE PLATE	1				
062		213122-9	O RING 12	1				
063		227917-4	SPIRAL BEVEL GEAR 38	1				
064		265199-0	+ PAN HEAD SCREW M3X8	3				

A:GA4593X01(H)

Interchange
O : Yes
X : No
< : the new part can be substituted for the current.
> : the current part can be substituted for the new.
S : Interchangeable as a set.

QA	

GA4593 / 115MM ANGLE GRINDER

Item	Sub	Parts No.	Parts Description	Qty	I/C	E/C No.	Close No.	Remark
065		285048-5	BEARING RETAINER 27-46	1				
066		210302-8	BALL BEARING 6903ZZ	1				
067		253744-3	FLAT WASHER 12	1				
068		213641-5	O RING 51	1				
069		312C11-4	BEARING BOX B	1				
070		266948-8	HEX S. H. BOLT M4X20 WITH WR	2				
071		213789-3	O-RING 38	1			DK810	
071-1		262211-7	RUBBER RING 37	1	<	DK810	DM715	
071-2		213789-3	O-RING 38	1	<	DM715		
072		232490-1	COMPRESSION SPRING 4	1				
073		327322-6	SLEEVE 4	2				
074		347910-3	LEVER B	1				
075		265C21-9	H.S.H.BOLT M4X35(WITH WG)	2				
076		211129-9	BALL BEARING 6201DDW	1				
077		267279-8	FLAT WASHER 21	1				
078		443124-3	FELT RING 17	1				
079		285854-8	BEARING RETAINER 20-33	1				
080		962105-3	RETAINING RING R-26	1				
081		327917-5	SPINDLE	1				
082		310514-4	LEAD FLANGE	1				
083		141L53-3	WHEEL COVER 115 COMPLETE	1			DK810	
	C10	8050A1-8	CAUTION LABEL	1			DK810	
083-1		141P44-8	WHEEL COVER 115 COMPLETE	1	<	DK810		
	C10	8050A1-8	CAUTION LABEL	1		DK810		
084		224447-6	INNER FLANGE 42B	1				
085		224485-8	LOCK NUT 14-45	1				
A01		A-80640	DEPRESSED CENTER WHEEL 115X36	1				
A02		199709-0	CUTTING W.C.A. 115 SET	1				
A03		162258-0	VIBRATION PROOF GRIP	1				
A04		782034-2	LOCK NUT WRENCH 35	1				
F02		191W05-0	115/125MM DUST COVER SET	1				
	C10	743129-6	BRUSH A	1				
	C20	743130-1	BRUSH B	1				
F03		191Y29-8	DUST COVER ATTACHMENT SET	1				
F04		1910X5-0	GRIP 35 SET	1				
F05		1910X6-8	GRIP 35 SET	1				
F07		1910X9-2	WHEEL COVER 115C SET	1				
F11		194514-0	VIBRATION PROOF GRIP SET	1				

A:GA4593X01(H)

Interchange
O : Yes
X : No
< : the new part can be substituted for the current.
> : the current part can be substituted for the new.
S : Interchangeable as a set.