QA	

Diagram / Parts List

DCL283F

CORDLESS CLEANER

2023/06

(QA) DCL283F / CORDLESS CLEANER

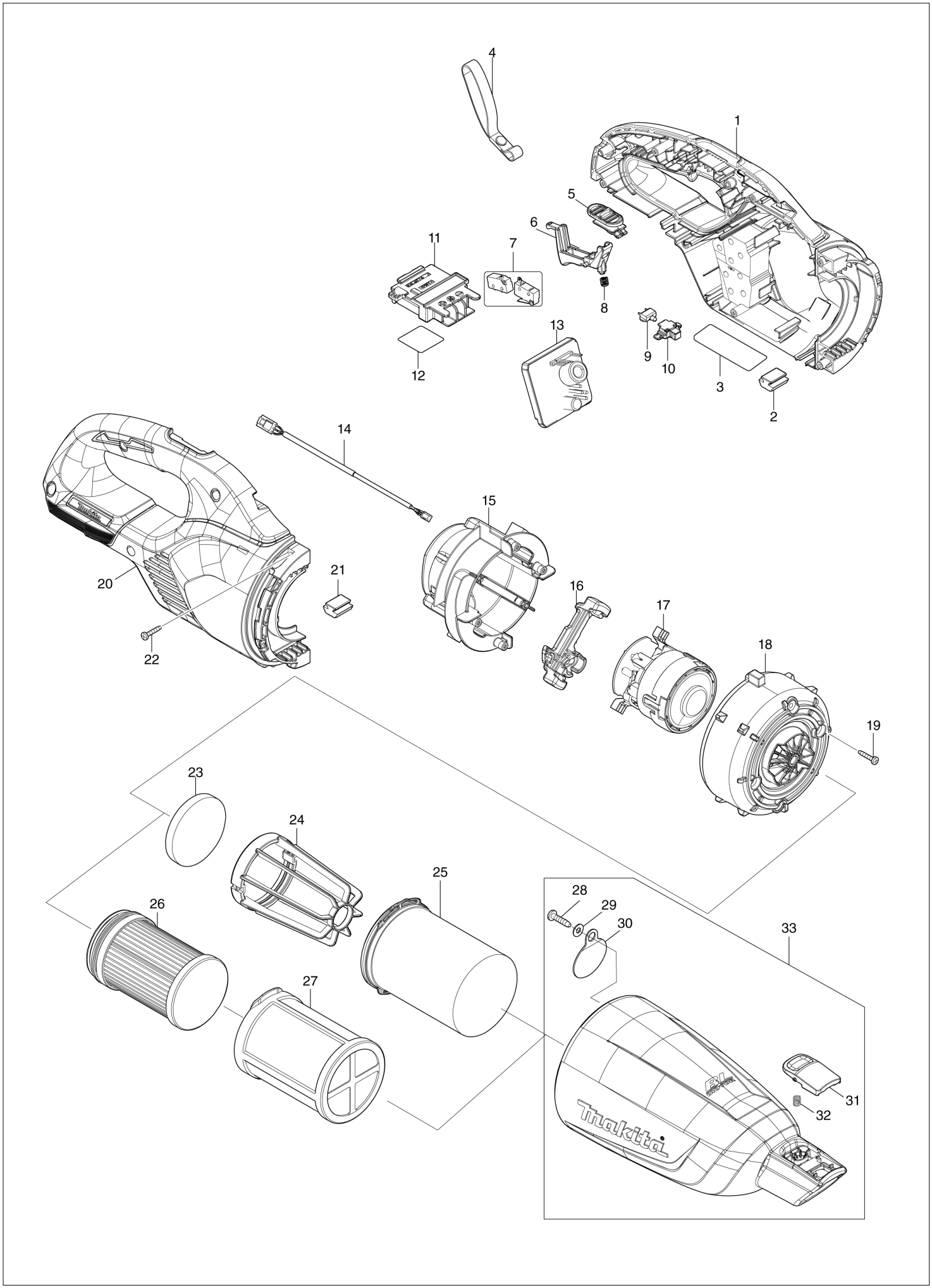

QA	

DCL283F / CORDLESS CLEANER

Item	Sub	Parts No.	Parts Description	Qty	I/C	E/C No.	Close No.	Remark
001		183Y62-4	HOUSING SET	1				
	C10	263005-3	RUBBER PIN 6	2				
	C20	422974-9	SPONGE SHEET	2				
	D10		INC. 2,20,21					
002		422460-0	RUBBER PLATE	1				
003		8588D6-6	DCL283F NAME PLATE	1				
004		163400-6	HANDSTRAP	1				
005		413M39-6	SLIDE SWITCH	1				
006		459324-5	SWITCH LEVER	1				
007		632N57-3	SWITCH UNIT	1				
008		232485-4	COMPRESSION SPRING 5	1				
009		620E82-2	LED CIRCUIT	1				
010		141H09-2	LED CASE COMPLETE	1				
011		643874-2	TERMINAL	1				
012		8588E4-7	DCL283F SERIAL NO. LABEL	1				
013		620L23-0	CONTROLLER	1				
014		632S32-9	LEAD UNIT	1				
015		141E55-7	MOTOR COVER R COMPLETE	1				
	C10	263002-9	RUBBER PIN 4	4				
016		422723-4	MOTOR COVER SEAL	1				
017		629B87-1	MOTOR ASSEMBLY	1				
018		413645-9	MOTOR COVER F	1				
019		266429-2	TAPPING SCREW 3X16	4				
020		183Y62-4	HOUSING SET	1				
	C10	263005-3	RUBBER PIN 6	2				
	C20	422974-9	SPONGE SHEET	2				
	D10		INC. 1,2,21					
021		422460-0	RUBBER PLATE	1				
022		266429-2	TAPPING SCREW 3X16	7				
023		422268-2	SPONGE SHEET 57	1				
024		458467-0	STAY	1				
025		459325-3	EASY SHAKE OFF FILTER B	1				
028		266326-2	TAPPING SCREW 4X18	1				
029		941051-3	FLAT WASHER 4	1				
030		424208-6	VALVE	1				
031		413F33-6	BUTTON C	1				
032		232485-4	COMPRESSION SPRING 5	1				
033		136965-1	CAPSULE ASSEMBLY	1				
	D10		INC. 28-32					
A01		127828-2	NOZZLE ASSEMBLY	1				
	C10	451410-8	ROLLER	4				
	C20	268208-4	PIN 3	4				
	C30	422963-4	WIPER	1				
A02		413809-5	SASH NOZZLE	1				
A03		459038-6	NOZZLE HOLDER	1				
A04		458942-6	PIPE	1				
A05B		***DC18RC	DC18RC FAST CHARGER	1				
	D10		COMPO-PARTS					
A06B		197280-8	BATTERY BL1850B SET	1				
A07B		450128-8	BATTERY COVER	1				
F22		1911L1-0	CLEANER STAND SET	1				

A:DCL283FZB(N)
B:DCL283FRTB(H)

Interchange
O : Yes
X : No
< : the new part can be substituted for the current.
> : the current part can be substituted for the new.
S : Interchangeable as a set.