SG	SINGAPORE

Diagram / Parts List

M6001

10MM DRILL

2022/02

(SG) M6001 / 10MM DRILL

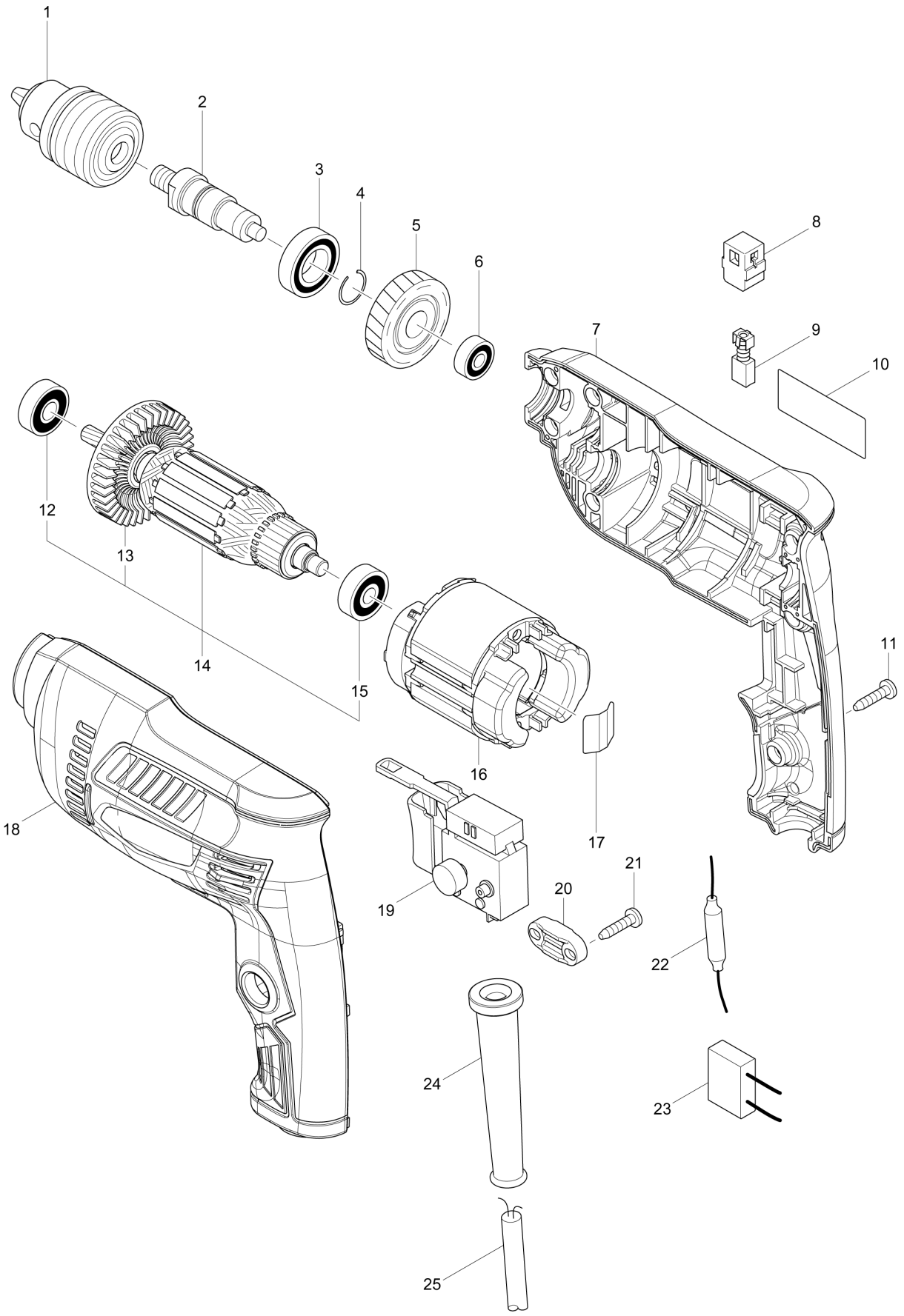

SG	SINGAPORE

M6001 / 10MM DRILL

Item	Sub	Parts No.	Parts Description	Qty	I/C	E/C No.	Close No.	Remark
001		766014-6	DRILL CHUCK S10	1				
002		324376-4	SPINDLE	1				
003A		211242-3	BALL BEARING 6902ZZ	1			B2540	
003-1A		210153-9	BALL BEARING 6902ZZ	1	O	B2540		
003-1B		210153-9	BALL BEARING 6902ZZ	1				
004		233925-5	RING SPRING 13	1				
005		226578-7	HELICAL GEAR 35	1				
006A		210028-2	BALL BEARING 606ZZ	1			B2540	
006-1A		210137-7	BALL BEARING 606ZZ	1	O	B2540		
006-1B		210137-7	BALL BEARING 606ZZ	1				
007-1A		183D44-0	HOUSING SET	1				
007-1B		183D43-2	HOUSING SET	1				
	D10		INC. 18					
008		643566-3	BRUSH HOLDER 5X8	2				
009		191998-3	CARBON BRUSH CB-85	1				
010		850X24-8	M6001 NAME PLATE	1				
011A		266326-2	TAPPING SCREW 4X18	7			C0991	
011-1A		265652-6	TAPPING SCREW 4X18	7	O	C0991		
011-1B		265652-6	TAPPING SCREW 4X18	7				
012A		210029-0	BALL BEARING 608ZZ	1			B2540	
012-1A		210046-0	BALL BEARING 608ZZ	1	O	B2540		
012-1B		210046-0	BALL BEARING 608ZZ	1				
013		240066-0	FAN 52	1				
014		515849-0	ARMATURE ASS'Y 240V	1				
	D10		INC. 12,13,15					
015A		210030-5	BALL BEARING 627ZZ	1			B2540	
015-1A		210050-9	BALL BEARING 627ZZ	1	O	B2540		
015-1B		210050-9	BALL BEARING 627ZZ	1				
016A		633579-2	FIELD 240V	1			B3631	
016-1A		633934-8	FIELD	1	<	B3631		
016-1B		633934-8	FIELD	1				
017		232210-3	LEAF SPRING	1				
018-1A		183D44-0	HOUSING SET	1				
018-1B		183D43-2	HOUSING SET	1				
	D10		INC. 7					
019		650551-9	SWITCH FA1-3/2BEZ-4	1				
020		687123-7	STRAIN RELIEF	1				
021A		266326-2	TAPPING SCREW 4X18	2			C0991	
021-1A		265652-6	TAPPING SCREW 4X18	2	O	C0991		
021-1B		265652-6	TAPPING SCREW 4X18	2				
024		682569-2	CORD GUARD 8-85	1				
025-1		692006-8	POWER SUPPLY CORD 1.0-2-2.0	1				
A01		763447-6	CHUCK KEY S10	1				
A02		418163-2	KEY HOLDER 10	1				

A:M6001G(H)
B:M6001B(H)

Interchange
O : Yes
X : No
< : the new part can be substituted for the current.
> : the current part can be substituted for the new.
S : Interchangeable as a set.