SG	SINGAPORE

Diagram / Parts List

CF100D

CORDLESS FAN

2021/07

(SG) CF100D / CORDLESS FAN

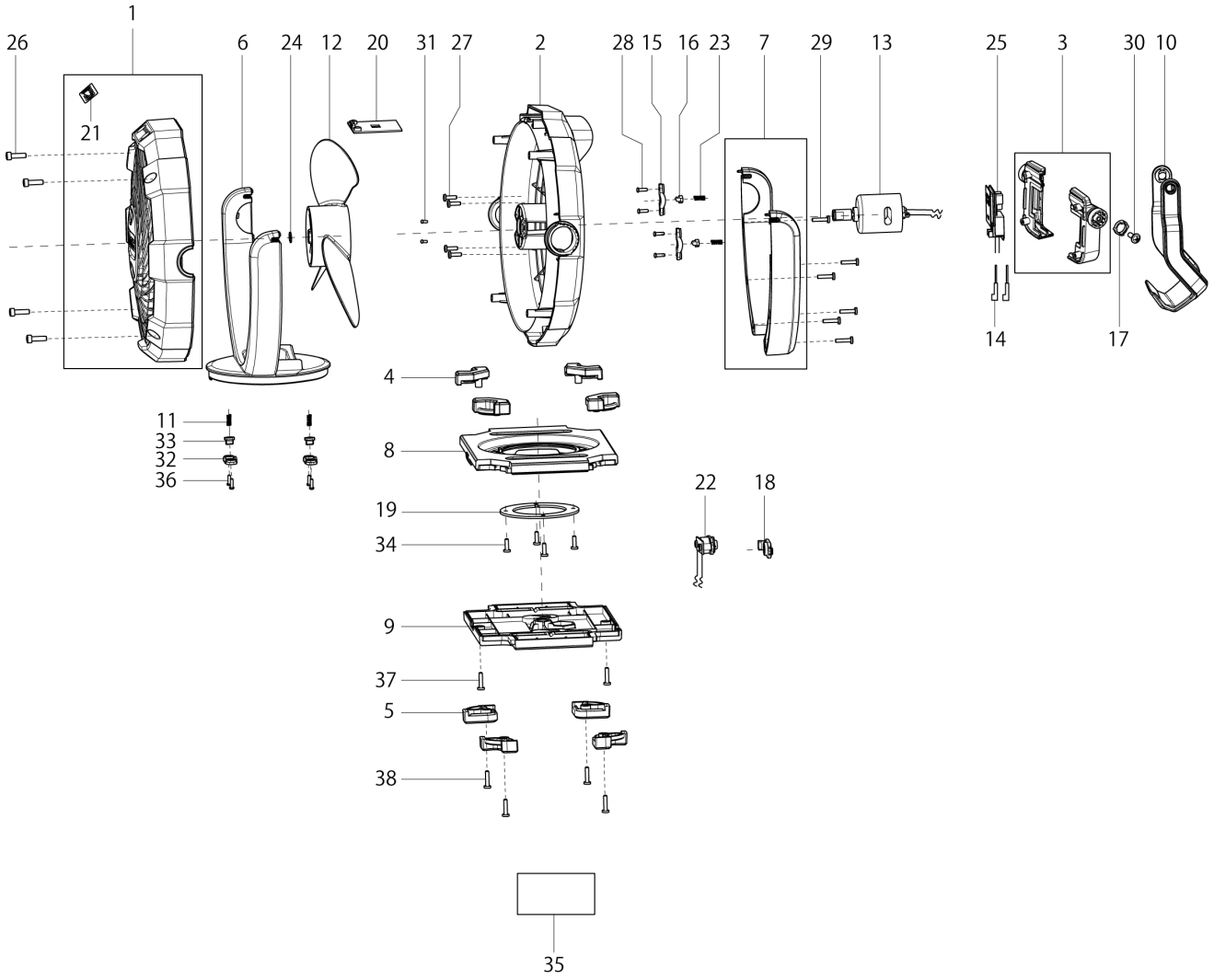

SG	SINGAPORE

CF100D / CORDLESS FAN

Item	Sub	Parts No.	Parts Description	Qty	I/C	E/C No.	Close No.	Remark
001		TE00000177	FRONT COVER	1				
	D10		INC. 21					
002		TE00000178	BACK COVER	1				
003		TE00000179	THE BATTERY HOUSING	1				
004		TE00000180	UP INSERT OF BOTTOM	4				
005		TE00000180	UP INSERT OF BOTTOM	4				
006		TE00000181	FRONT COVER OF THE STAND	1				
007		TE00000182	BACK COVER OF THE SUPPORT	1				
008		TE00000183	UP COVER OF THE BASE	1				
009		TE00000184	LOWER COVER OF THE BASE	1				
010		TE00000185	HOOK AND HANDLE	1				
011		TE00000197	SPRING1	2				
012		TE00000186	FAN BLADE	1				
013		TE00000187	MOTOR AND LEAD	1				
014		TE00000188	LEAD WITH INSERTING PIECE	2				
015		TE00000189	STOPPER SUPPORT	2			Y07586	
015-1		TE00000189	STOPPER SUPPORT	2	O	Y07586		
016		TE00000190	STOPPER	2			Y07586	
016-1		TE00000190	STOPPER	2	O	Y07586		
017		TE00000191	STOPPER FOR HOOK AND HANDLE	2			Y07586	
017-1		TE00000191	STOPPER FOR HOOK AND HANDLE	2	O	Y07586		
018		TE00000192	CHARGING SOCKET PLUG	1				
019		TE00000193	WASHER 48	1			Y07586	
019-1		TE00000193	WASHER 48	1	O	Y07586		
020		TE00000194	PCB	1				
021		TE00000195	SWITCH LABEL	1				
022		TE00000196	PCB DC JACK ASS'Y	1			Y07586	
022-1		TE00000196	PCB DC JACK ASS'Y	1	O	Y07586		
023		TE00000198	SPRING2	2				
024		TE00000199	CIRCLIP	1				
025		644813-5	TERMINAL	1				
026		TE00000201	HEX TAPPING SCREW 4X14	4			Y07586	
026-1		TE00000201	HEX TAPPING SCREW 4X14	4	O	Y07586		
027		TE00000202	SCREW 3X10	4				
028		TE00000203	SELF-TAPPING SCREW 2.5X8	4				
029		TE00000204	SCREW 3X14	6				
030		TE00000205	CROSS BELT PAD SCREWS 4X10	2				
031		TE00000206	P.H. SCREW M3X5	2				
032		TE00000189	STOPPER SUPPORT	2			Y07586	
032-1		TE00000189	STOPPER SUPPORT	2	O	Y07586		
033		TE00000190	STOPPER	2			Y07586	
033-1		TE00000190	STOPPER	2	O	Y07586		
034		TE00000202	SCREW 3X10	4				
036		TE00000203	SELF-TAPPING SCREW 2.5X8	4				
037		TE00000204	SCREW 3X14	2				
038		TE00000204	SCREW 3X14	4				
039		TE00000209	ADAPTER	1			Y08262	
039-1		TE00000439	AC ADAPTER	1	O	Y08262		

Interchange
O : Yes
X : No
< : the new part can be substituted for the current.
> : the current part can be substituted for the new.
S : Interchangeable as a set.