(QA) M3702 / TRIMMER

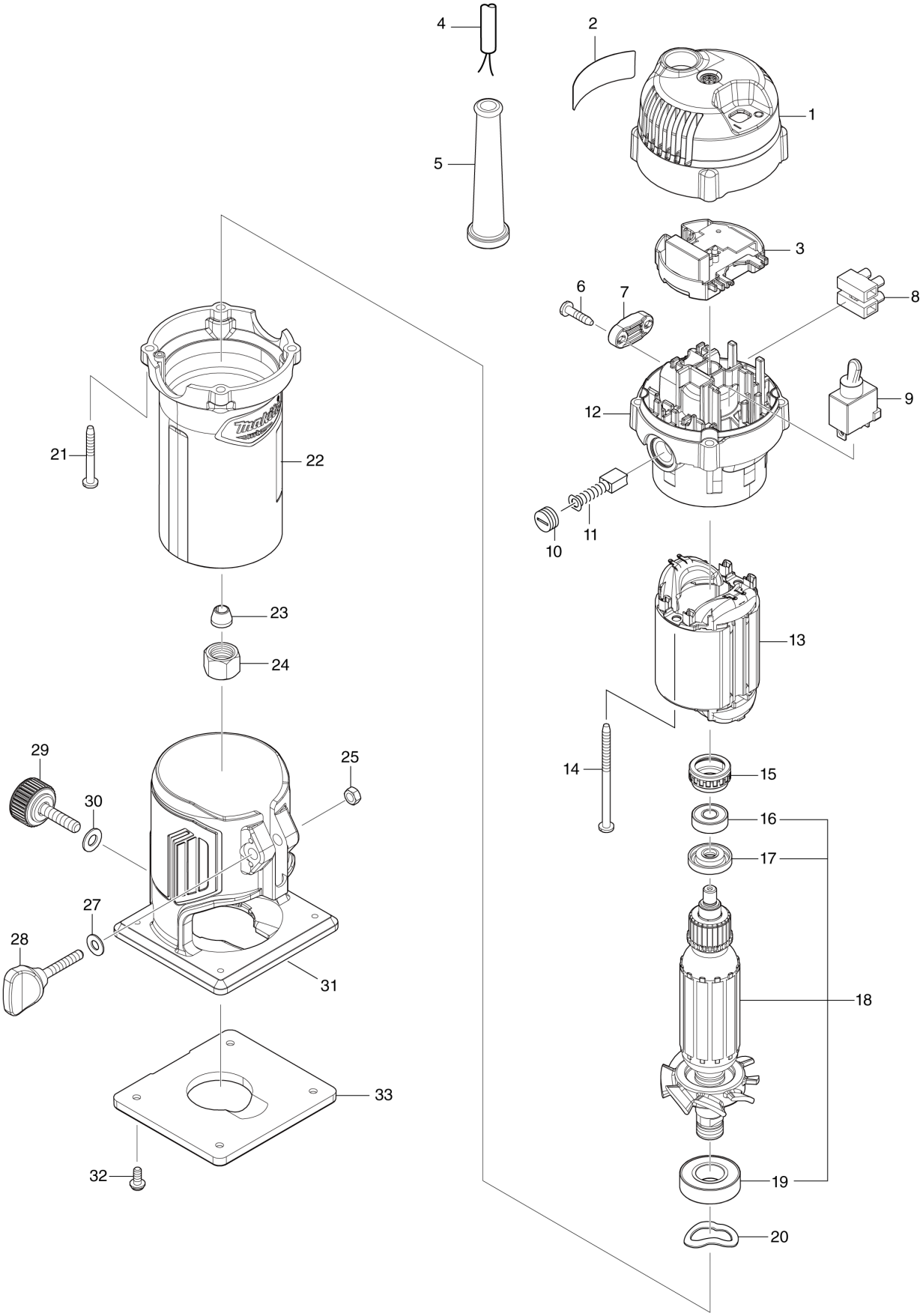

QA	

M3702 / TRIMMER

Item	Sub	Parts No.	Parts Description	Qty	I/C	E/C No.	Close No.	Remark
001		413774-8	TOP COVER	1				
002		811T83-3	M3702 NAME PLATE	1				
003		620F95-9	CONTROLLER	1				
004		692006-8	POWER SUPPLY CORD 1.0-2-2.0	1				
005		682569-2	CORD GUARD 8-85	1				
006		266326-2	TAPPING SCREW 4X18	2				
007		687123-7	STRAIN RELIEF	1				
008		654531-7	TERMINAL BLOCK 2P	1				
009		651424-9	SWITCH STL106AT	1				
010		643987-9	BRUSH HOLDER CAP 5-8	2				
011		195010-1	CARBON BRUSH SET CB-411	1				
012		141D21-8	BRACKET COMPLETE	1				
013		634774-7	FIELD	1			Y08864	
013-1		520155-0	FIELD ASS'Y 240V	1	<	Y08864		
	C10	654450-7	RING TERMINAL	2		Y08864		
	C20	654485-8	PARALLEL SPLICE	2		Y08864		
014		266340-8	TAPPING SCREW 4X65	2				
015		421868-5	LABYRINTH RUBBER RING 19	1				
016		210062-2	BALL BEARING 607ZZ	1				
017		681668-7	INSULATION WASHER	1				
018		510227-9	ARMATURE ASS'Y 240V	1				
	C10	241667-7	FAN 52	1				
	D10		INC. 16,17,19					
019		211247-3	BALL BEARING 6002DDW	1				
020		267785-3	WAVE WASHER 23	1				
021		266351-3	TAPPING SCREW 4X35	4				
022		141D80-2	MOTOR HOUSING COMPLETE	1				
	C10	8034K8-2	SCALE LABEL	1				
023		763662-2	COLLET CONE 6	1				
024		763661-4	COLLET NUT 6	1				
025		252156-7	HEX. NUT M5-8	1				
027		941101-4	FLAT WASHER 5	1				
028		251867-1	THUMB SCREW M5X30	1				
029		265763-7	THUMB SCREW M6X25	1				
030		941151-9	FLAT WASHER 6	1				
031		454022-6	BASE	1				
032		265142-9	+ PAN HEAD SCREW M4X10	4				
033		410585-2	BASE PROTECTOR	1				
A01		122703-7	TRIMMER GUIDE ASS'Y	1				
	C10	251471-6	- FLAT HEAD SCREW M5	1				
	C20	265135-6	+ COUNTERSUNK HEAD SCREW M4X1	1				
	C30	265763-7	THUMB SCREW M6X25	1				
	C40	265764-5	THUMB SCREW M6	1				
	C50	317788-8	GUIDE HOLDER	1				
	C60	324378-0	ROLLER 11	1				
	C70	341136-9	HOOK	1				
	C80	941151-9	FLAT WASHER 6	1				
A02		122704-5	STRAIGHT GUIDE ASS'Y	1				
	C10	252649-4	THUMB NUT M6	1				
	C20	266339-3	CAP SQUARE NECK BOLT M6X20	1				
	C30	343593-7	GUIDE PLATE	1				
A03		343577-5	TEMPLET GUIDE 10	1				
A04		781036-5	WRENCH 10	1				
A05		781037-3	WRENCH 17	1				
A06		418647-0	CHIP DEFLECTOR	1				
A07		733239-7	STRAIGHT BIT 6	1			DC660	
A07-1		191Y83-2	STRAIGHT BIT 6 SET	1	O	DC660		

Interchange
O : Yes
X : No
< : the new part can be substituted for the current.
> : the current part can be substituted for the new.
S : Interchangeable as a set.