(SG) HG6031V / HEAT GUN

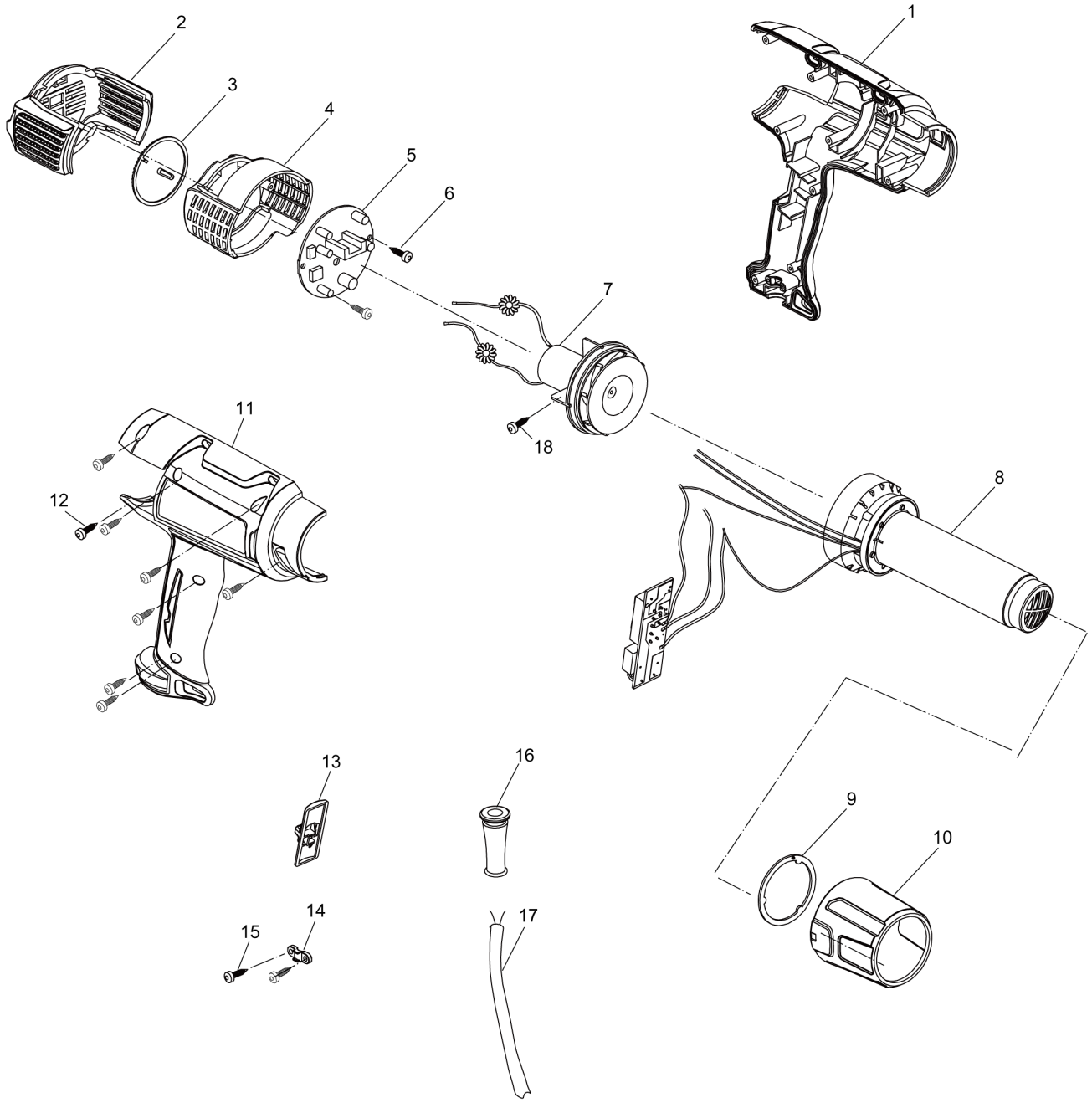

SG	SINGAPORE

HG6031V / HEAT GUN

Item	Sub	Parts No.	Parts Description	Qty	I/C	E/C No.	Close No.	Remark
001		PR00000015	HOUSING LEFT	1				
002		PR00000016	REAR COVER	1				
003		PR00000017	HEATER CONTOROLL DIAL	1				
004		PR00000018	REAR HOUSING	1				
005		PR00000019	CONTROLLER 220-240V	1				
006		PR00000020	TAPPING SCREW	2				
007		PR00000021	MOTOR ASSEMBLY 220-240V	1				
008		PR00000022	HEATER & SWITCH ASSY 230V-240V	1				
009		PR00000011	SUPPORT RING	1				
010		PR00000010	FRONT COVER COMPLETE	1				
011		PR00000023	HOUSING RIGHT	1				
012		PR00000004	TAPPING SCREW	8				
013		PR00000005	SWITCH COVER	1				
014		PR00000006	CORD CLAMP	1				
015		PR00000007	TAPPING SCREW	2				
016		PR00000008	CORD GUARD	1				
017		PR00000014	POWER SUPPLY CORD	1				
018		PR00000007	TAPPING SCREW	1				
A01		PR00000028	GLASS PROTECTION NOZZLE	1			Y07787	
A02		PR00000029	WIDE-SLOT NOZZLE	1			Y07787	
A03		PR00000030	REFLECTOR NOZZLE	1			Y07787	
A04		PR00000031	REDUCTION NOZZLE 20mm	1			Y07787	
A05		PR00000032	OVERLAP WELDING NOZZLE	1			Y07787	
A06		PR00000033	SOLDER SLEEVES REFLECTOR	1			Y07787	
A07		PR00000034	WELDING NOZZLE	1			Y07787	
A08		PR00000035	PRESSURE ROLLER	1			Y07787	
A09		PR00000036	WELDING RODS (ABS)	1			Y07787	
A10		PR00000037	WELDING RODS (HDPE)	1			Y07787	
A11		PR00000038	WELDING RODS (PP)	1			Y07787	
A12		PR00000039	SPEED WELDING NOZZLE	1			Y07787	
A13		PR00000040	SCRAPER	1			Y07787	
A14		PR00000041	SCRAPER SET	1			Y07787	
A15		PR00000042	SCRAPER	1			Y07787	
A16		PR00000061	PLASTIC CASE	1		Y07918		

Interchange
O : Yes
X : No
< : the new part can be substituted for the current.
> : the current part can be substituted for the new.
S : Interchangeable as a set.