(QA) GA021G / 100MM CORDLESS ANGLE GRINDER

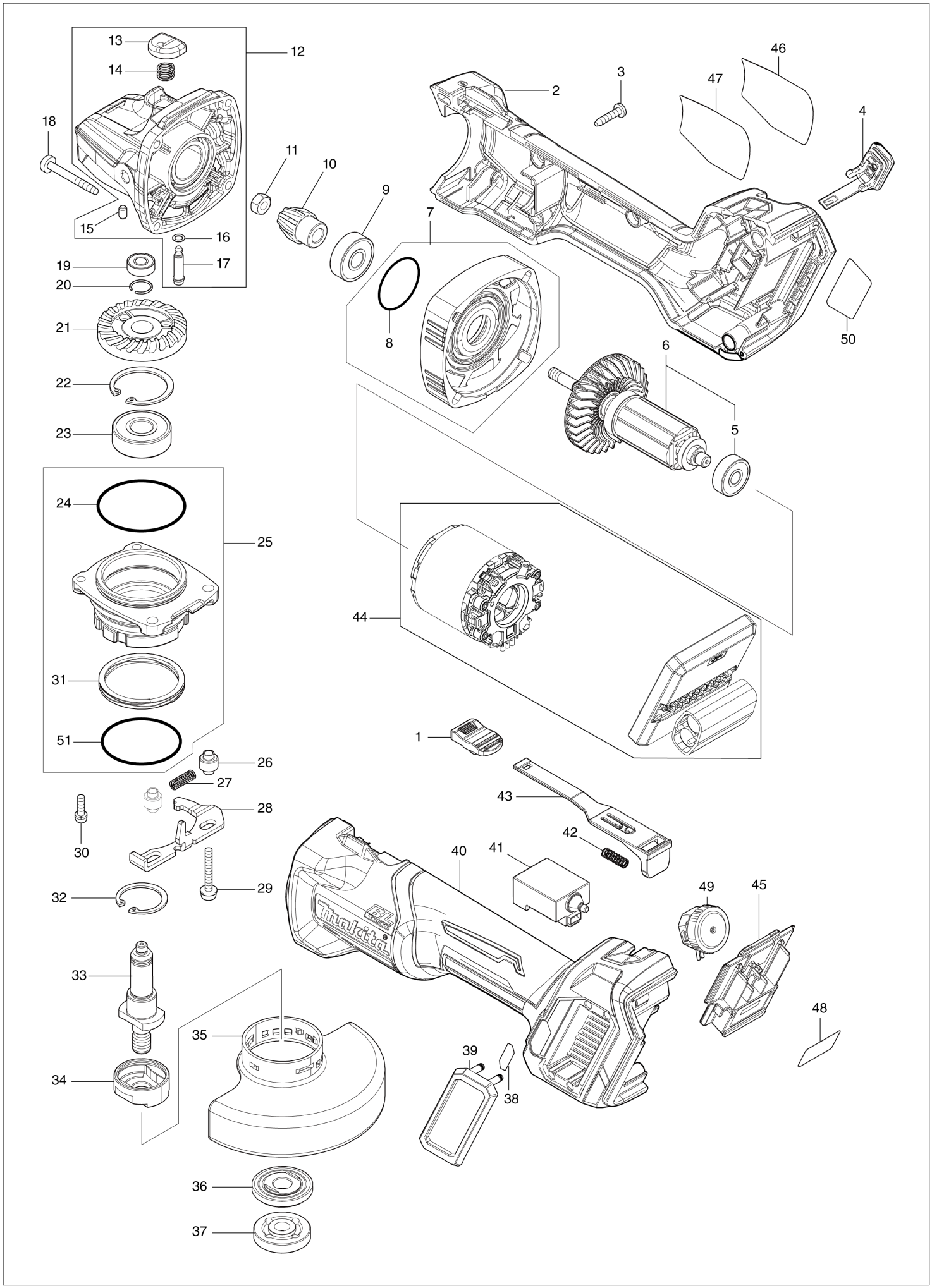

QA	

GA021G / 100MM CORDLESS ANGLE GRINDER

Item	Sub	Parts No.	Parts Description	Qty	I/C	E/C No.	Close No.	Remark
001		455447-7	SWITCH KNOB	1				
002		183P76-9	MOTOR HOUSING SET	1				
	C10	263005-3	RUBBER PIN 6	2				
	D10		INC. 40					
003		266326-2	TAPPING SCREW 4X18	5				
004		140G30-2	CAP COMPLETE	1				
	C10	213218-6	O RING 16	1			DA223	
	C11	213A05-9	O-RING16	1	O	DA223		
	C20	818H48-4	CAP LABEL	1				
005		210023-2	BALL BEARING 627DDW	1				
006		519595-7	ROTOR ASS'Y	1				
	D10		INC. 5					
007		136190-4	GEAR HOUSING COVER ASS'Y	1				
	D10		INC. 8					
008		213445-5	O-RING 26	1				
009		210042-8	BALL BEARING 629LLB	1				
010		226976-5	SPIRAL BEVEL GEAR 10	1				
011		252186-8	HEX. NUT M6	1				
012		136198-8	GEAR HOUSING ASS'Y	1				
	D10		INC. 13-17					
013		412234-7	PIN CAP	1				
014		233072-2	COMPRESSION SPRING 8	1				
015		263002-9	RUBBER PIN 4	1				
016		213960-9	O RING 5	1				
017		256546-6	SHOULDER PIN 4	1				
018		266048-4	TAPPING SCREW 4X40	4				
019		210006-2	BALL BEARING 696ZZ	1				
020		233950-6	RING SPRING 11	1				
021		226862-0	SPIRAL BEVEL GEAR 37	1				
022		962151-6	RETAINING RING R-32	1				
023		211129-9	BALL BEARING 6201DDW	1				
024		213622-9	O RING 45	1			DH534	
024-1		213622-9	O RING 45	1	O	DH534		
025		136262-5	BEARING BOX ASS'Y	1				
	D10		INC. 24,31,51					
026		327322-6	SLEEVE 4	2				
027		232490-1	COMPRESSION SPRING 4	1				
028		347641-4	LEVER B	1				
029		911159-7	PAN HEAD SCREW M4X30	2				
030		911138-5	P.H.SCREW M4X20 WITH WR	2				
031		232542-8	COILED WAVE SPRING 41	1			DH534	
031-1		232542-8	COILED WAVE SPRING 41	1	O	DH534		
032		962105-3	RETAINING RING R-26	1				
033		326669-5	SPINDLE	1				
034		310516-0	LEAD FLANGE B	1				
035		347478-9	WHEEL COVER 100	1				
036		224483-2	INNER FLANGE 30	1				
037		224559-5	LOCK NUT 10-30	1				
038		8005T5-8	XGT LOGO LABEL	1				
039		422610-7	DUST COVER	1				
040		183P76-9	MOTOR HOUSING SET	1				
	C10	263005-3	RUBBER PIN 6	2				
	D10		INC. 2					
041		651445-1	SWITCH FPM-1130	1				
042		233121-5	COMPRESSION SPRING 4	1				
043		412233-9	SWITCH LEVER	1				
044		629498-8	STATOR COMPLETE	1				
045		632P65-6	TERMINAL UNIT	1				
046		8008U5-3	CLEAR LABEL	1				
047		857G97-0	GA021G NAME PLATE	1				
048		857H00-7	GA021G SERIAL NO. LABEL	1				
049		620D30-5	DIAL CIRCUIT	1				
050		8015J1-9	INDICATION LABEL	1				
051		213510-0	O RING 36	1				
A01		158237-4	GRIP 36 COMPLETE	1				

B:GA021GD201(H)
C:GA021GM201(H)

Interchange
O : Yes
X : No
< : the new part can be substituted for the current.
> : the current part can be substituted for the new.
S : Interchangeable as a set.

QA	

GA021G / 100MM CORDLESS ANGLE GRINDER

Item	Sub	Parts No.	Parts Description	Qty	I/C	E/C No.	Close No.	Remark
A02		A-80852	GRINDING WHEEL 100X6X16	1				
A03		782420-7	LOCK NUT WRENCH 20	1				
A04B		412393-7	BATTERY COVER	2				
A04C		412393-7	BATTERY COVER	2				
A05B		***DC40RA	DC40RA FAST CHARGER	1				
	D10		COMPO-PARTS					
A05C		***DC40RA	DC40RA FAST CHARGER	1				
	D10		COMPO-PARTS					
A06B		191B36-3	BATTERY BL4025 SET	2				
A06C		191B26-6	BATTERY BL4040 SET	2				
A07B		821552-6	CONNECTOR PLASTIC CASE (TYPE4)	1				
	C10	453974-8	LATCH	4				
A07C		821552-6	CONNECTOR PLASTIC CASE (TYPE4)	1				
	C10	453974-8	LATCH	4				
A08B		8017N3-5	GA021GD201 PLASTIC CASE LABEL	2				
A08C		8017P8-9	GA021GM201 PLASTIC CASE LABEL	2				
A09B		8017N2-7	GA021GD201 INDICATION LABEL	1				
A09C		8017P7-1	GA021GM201 INDICATION LABEL	1				
A10B		835E79-0	INNER TRAY	1				
A10C		835E79-0	INNER TRAY	1				

B:GA021GD201(H)
C:GA021GM201(H)

Interchange
O : Yes
X : No
< : the new part can be substituted for the current.
> : the current part can be substituted for the new.
S : Interchangeable as a set.