# (QA) DUT130 / CORDLESS MIXER

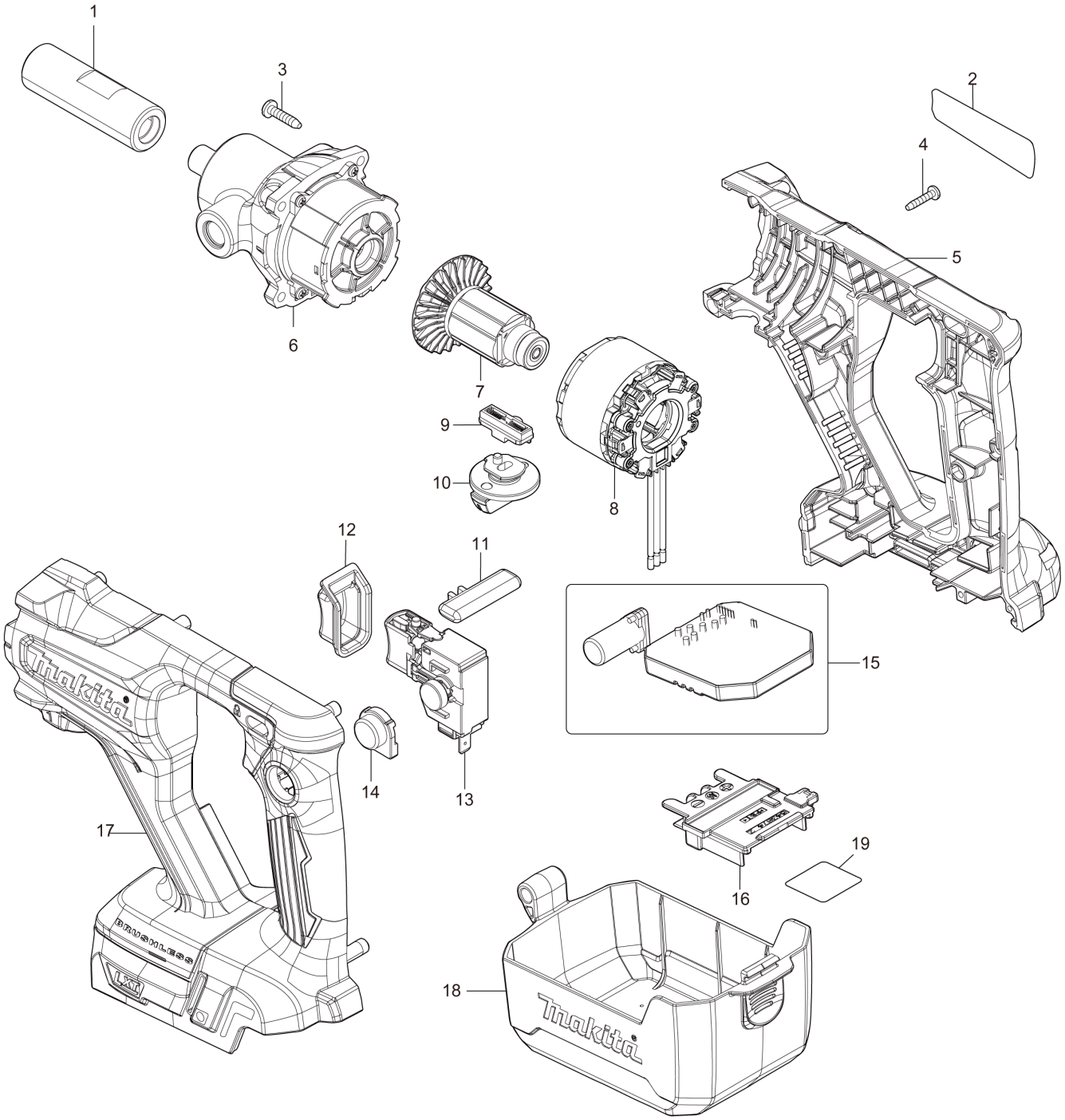

| QA | |
|---|---|

# DUT130 / CORDLESS MIXER

| Item | Sub | Parts No. | Parts Description | Qty | I/C | E/C No. | Close No. | Remark |
|---|---|---|---|---|---|---|---|---|
| 001 | | 323962-8 | SHAFT HOLDER 1/2-M12 | 1 | | | D5930 | |
| 001-1 | | 323962-8 | SHAFT HOLDER 1/2-M12 | 1 | < | D5930 | | |
| 002 | | 855D77-2 | DUT130 NAME PLATE | 1 | | | | |
| 003-1 | | 266045-0 | TAPPING SCREW 4X20 | 4 | | | | |
| 004 | | 266130-9 | TAPPING SCREW BIND PT 3X16 | 10 | | | | |
| 005 | | 183L06-6 | HOUSING SET | 1 | | | | |
| | C10 | 263005-3 | RUBBER PIN 6 | 2 | | | | |
| | C20 | 252126-6 | HEX. LOCK NUT M4-7 | 2 | | | | |
| | D10 | | INC. 17 | | | | | |
| 006 | | 127065-8 | GEAR ASSEMBLY | 1 | | | | |
| 007 | | 619551-8 | ROTOR | 1 | | | | |
| 008 | | 629396-6 | STATOR | 1 | | | | |
| 009 | | 127066-6 | CHANGE LEVER ASSEMBLY | 1 | | | | |
| | C10 | 232518-5 | COMPRESSION SPRING 4 | 2 | | | | |
| 010 | | 127282-0 | SPEED CHANGE LEVER ASSEMBLY | 1 | | | | |
| | C10 | 213118-0 | O RING 12 | 1 | | | | |
| 011 | | 458822-6 | LOCK LEVER | 1 | | | | |
| 012 | | 458816-1 | SWITCH COVER | 1 | | | | |
| 013 | | 651088-9 | SWITCH C3JW-4B-1L | 1 | | | | |
| 014 | | 458819-5 | LOCK ON BUTTON COVER | 1 | | | | |
| 015 | | 620972-9 | CONTROLLER | 1 | | | | |
| 016 | | 643874-2 | TERMINAL | 1 | | | | |
| 017 | | 183L06-6 | HOUSING SET | 1 | | | | |
| | C10 | 263005-3 | RUBBER PIN 6 | 2 | | | | |
| | C20 | 252126-6 | HEX. LOCK NUT M4-7 | 2 | | | | |
| | D10 | | INC. 5 | | | | | |
| 018 | | 458820-0 | COVER | 1 | | | | |
| 019 | | 855D80-3 | DUT130 SERIAL NO. LABEL | 1 | | | | |
| A01 | | 140G50-6 | GRIP COMPLETE | 1 | | | | |
| A02 | | A-43692 | MIXING BLADE 165 | 1 | | | | |
| A03 | | A-43751 | SHAFT COMPLETE | 1 | | | Y08001 | |
| A03-1 | | 168349-5 | SHAFT COMPLETE | 1 | O | Y08001 | | |
| A04 | | 265220-5 | HEX. BOLT M8X18 | 1 | | | | |
| A05 | | 326649-1 | SHAFT HOLDER 1/2-M14 | 1 | | | D5930 | |
| A05-1 | | 326649-1 | SHAFT HOLDER 1/2-M14 | 1 | < | D5930 | | |
| A06 | | 458814-5 | FRONT COVER | 1 | | | | |
| A07 | | 781006-4 | WRENCH 13 | 1 | | | | |
| A08 | | 781010-3 | WRENCH 19 | 2 | | | | |
| A09 | | 831253-8 | TOTE BAG | 1 | | | | |
| A10B | | 450128-8 | BATTERY COVER | 2 | | | | |
| A11B | | ***DC18RC | DC18RC FAST CHARGER | 1 | | | | |
| | D10 | | COMPO-PARTS | | | | | |
| A12-1B | | 197280-8 | BATTERY BL1850B SET | 2 | | | | |
| E01 | | 8015N5-9 | M12/M14 LABEL | 1 | | D2915 | | |

B:DUT130RTE(H)

Interchange
O : Yes
X : No
< : the new part can be substituted for the current.
> : the current part can be substituted for the new.
S : Interchangeable as a set.