(SG) DUM604 / 160MM CORDLESS GRASS SHEAR

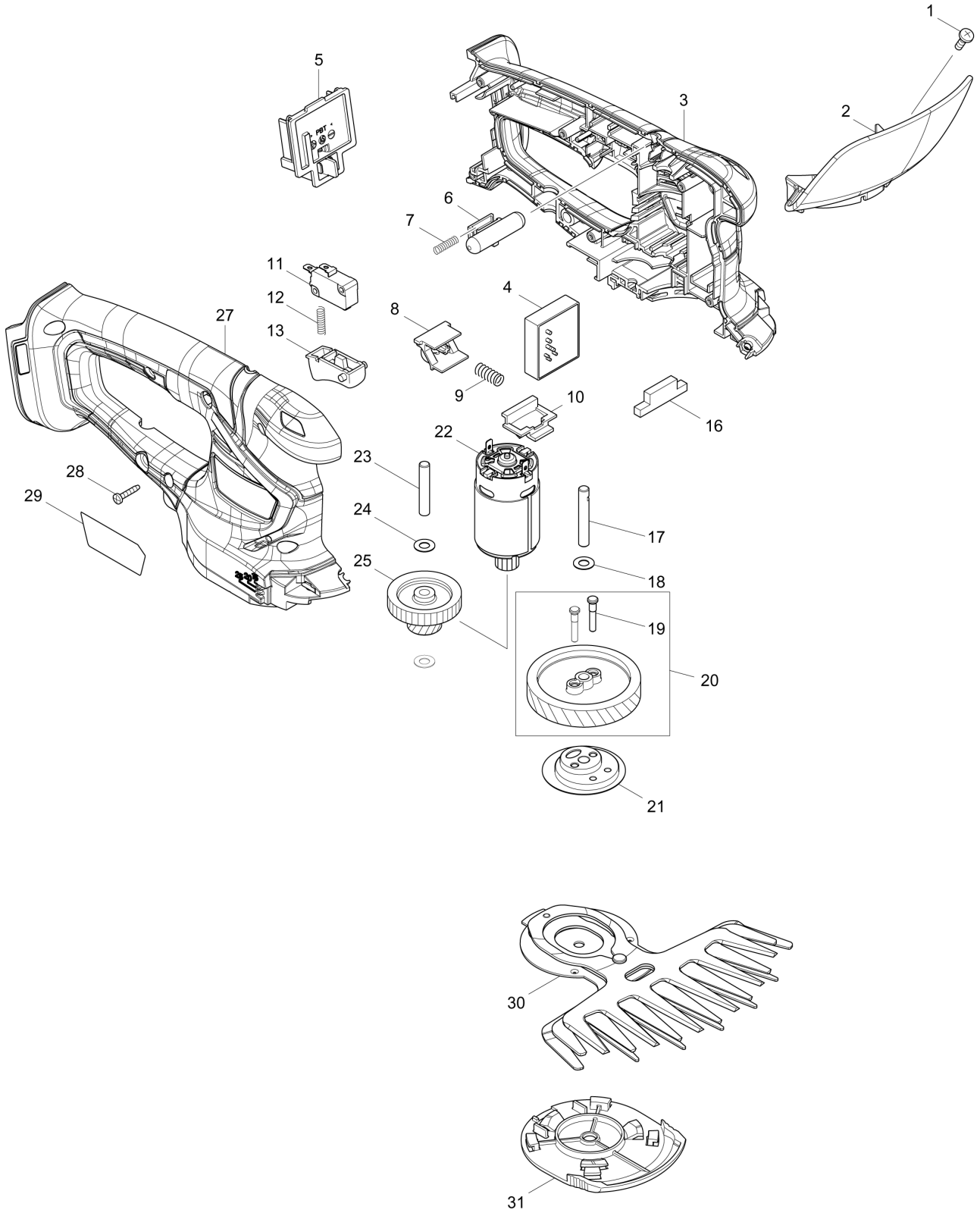

SG	SINGAPORE

DUM604 / 160MM CORDLESS GRASS SHEAR

Item	Sub	Parts No.	Parts Description	Qty	I/C	E/C No.	Close No.	Remark
001		915116-7	BINDING HEAD SCREW M4X12	1				
002		144342-3	PROTECTOR COMPLETE	1			D2683	
	C10	819948-3	CAUTION LABEL	1			D2683	
002-1		140V97-0	PROTECTOR COMPLETE	1	<	D2683		
	C10	819948-3	CAUTION LABEL	1		D2683		
003		183G03-2	HOUSING SET	1			DB439	
	C10	931102-0	HEX. NUT M4	1			DB439	
	C20	263005-3	RUBBER PIN 6	2			DB439	
	C30	346275-0	PLATE	2			DB439	
	D10		INC. 27				DB439	
003-1		183U53-1	HOUSING SET	1	S	DB439		
	C10	931102-0	HEX. NUT M4	1		DB439		
	C20	263005-3	RUBBER PIN 6	2		DB439		
	C30	346275-0	PLATE	2		DB439		
	D10		INC. 27			DB439		
004		620647-0	CONTROLLER	1			D9896	
004-1		620E35-1	CONTROLLER	1	<	D9896		
005		643852-2	TERMINAL	1				
006		452438-9	LOCK OFF BUTTON	1			DB439	
006-1		413A16-6	LOCK OFF BUTTON	1	S	DB439		
007		231473-8	COMPRESSION SPRING 4	1				
008		457534-8	SLIDE PLATE	1				
009		234339-1	COMPRESSION SPRING 6	1				
010		454879-5	LOCK LEVER	1				
011		650744-8	SWITCH D3V-16-3C26	1				
012		231473-8	COMPRESSION SPRING 4	1				
013		417564-1	SWITCH LEVER	1				
016		451814-4	DUST GUARD	1				
017		268254-7	PIN 6	1				
018		253715-0	FLAT WASHER 6	1				
019		268256-3	PIN 4	2				
020		135883-0	HELICAL GEAR 47 ASS'Y	1				
	D10		INC. 19					
021		161598-3	CRANK COMPLETE	1				
022		629943-3	DC MOTOR	1				
023		268076-5	PIN 6	1				
024		253715-0	FLAT WASHER 6	2				
025		226831-1	GEAR 12-31	1				
027		183G03-2	HOUSING SET	1			DB439	
	C10	931102-0	HEX. NUT M4	1			DB439	
	C20	263005-3	RUBBER PIN 6	2			DB439	
	C30	346275-0	PLATE	2			DB439	
	D10		INC. 3				DB439	
027-1		183U53-1	HOUSING SET	1	S	DB439		
	C10	931102-0	HEX. NUT M4	1		DB439		
	C20	263005-3	RUBBER PIN 6	2		DB439		
	C30	346275-0	PLATE	2		DB439		
	D10		INC. 3			DB439		
028		266429-2	TAPPING SCREW 3X16	6				
029		853A12-6	DUM604 NAME PLATE	1				
030		195267-4	SHEAR BLADE ASSEMBLY SET	1			D1118	
	C10	188369-3	OIL VESSEL SET	1			D1118	
030-1		195267-4	SHEAR BLADE ASSEMBLY SET	1	O	D1118		
	C10	188369-3	OIL VESSEL SET	1		D1118		
031		140451-6	UNDER COVER COMPLETE	1				
A01		452055-5	BLADE COVER	1				
A02		457426-1	GRASS RECEIVER 160	1				

Interchange
O : Yes
X : No
< : the new part can be substituted for the current.
> : the current part can be substituted for the new.
S : Interchangeable as a set.