(SG) DHP453 / CORDLESS PERCUSSN-DRIVER DRILL

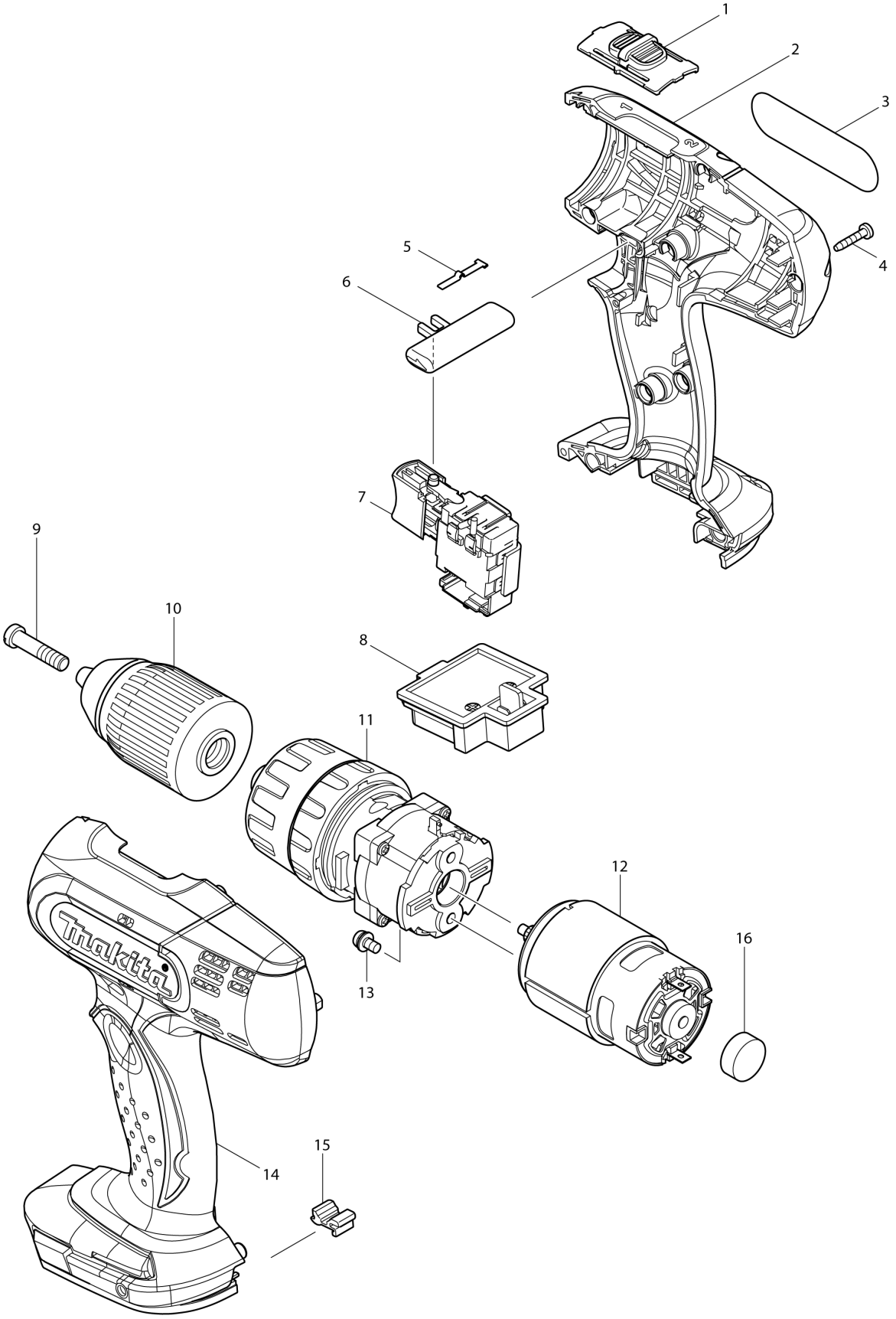

SG	SINGAPORE

DHP453 / CORDLESS PERCUSSN-DRIVER DRILL

Item	Sub	Parts No.	Parts Description	Qty	I/C	E/C No.	Close No.	Remark
001		125310-5	SPEED CHANGE LEVER ASS'Y	1				
	C10	231433-0	COMPRESSION SPRING 4	2				
002		187363-2	HOUSING SET	1				
	C10	263005-3	RUBBER PIN 6	2				
	D10		INC. 14					
003		815J03-9	DHP453 NAME PLATE	1				
004		266130-9	TAPPING SCREW BIND PT 3X16	9				
005		232182-2	LEAF SPRING	1				
006		419250-0	F/R CHANGE LEVER	1				
007		632A24-0	SWITCH UNIT	1				
008		643852-2	TERMINAL	1				
009		251468-5	- FLAT HEAD SCREW M6X22	1				
010		766004-9	KEYLESS DRILL CHUCK 13	1				
011B		125485-0	GEAR ASS'Y	1			A7840	
011C		125485-0	GEAR ASS'Y	1			A7840	
011-1B		125485-0	GEAR ASS'Y	1	O	A7840		
011-1C		125485-0	GEAR ASS'Y	1	O	A7840		
011-1D		125485-0	GEAR ASS'Y	1				
012		629937-8	DC MOTOR	1				
013		911108-4	PAN HEAD SCREW M4X8	2				
014		187363-2	HOUSING SET	1				
	C10	263005-3	RUBBER PIN 6	2				
	D10		INC. 2					
015		424476-1	CUSHION	1				
016		421940-3	CAP	1				
A01		784636-0	+- BIT 2-65	1				
A02		***DC18RC	DC18RC FAST CHARGER	1				
A03-1B		196399-0	BATTERY BL1840 SET	2			A9784	
A03-1C		196235-0	BATTERY BL1815N SET	2				
A03-2B		197265-4	BATTERY BL1840B SET	2	<	A9784	C5218	
A03-2D		197600-6	BATTERY BL1830B SET	2			C4176	
A03-3B		197265-4	BATTERY BL1840B SET	2	O	C5218		
A03-3D		197600-6	BATTERY BL1830B SET	2	O	C4176		
A04		450128-8	BATTERY COVER	1				
A05		158777-2	PLASTIC CARRYING CASE	1				
	C10	163455-1	LATCH	2				
	C20	419360-3	HANDLE	1				

B:DHP453RME(H)
C:DHP453RYE(H)
D:DHP453RFE(H)

Interchange
O : Yes
X : No
< : the new part can be substituted for the current.
> : the current part can be substituted for the new.
S : Interchangeable as a set.