(SG) DCL280F / CORDLESS CLEANER

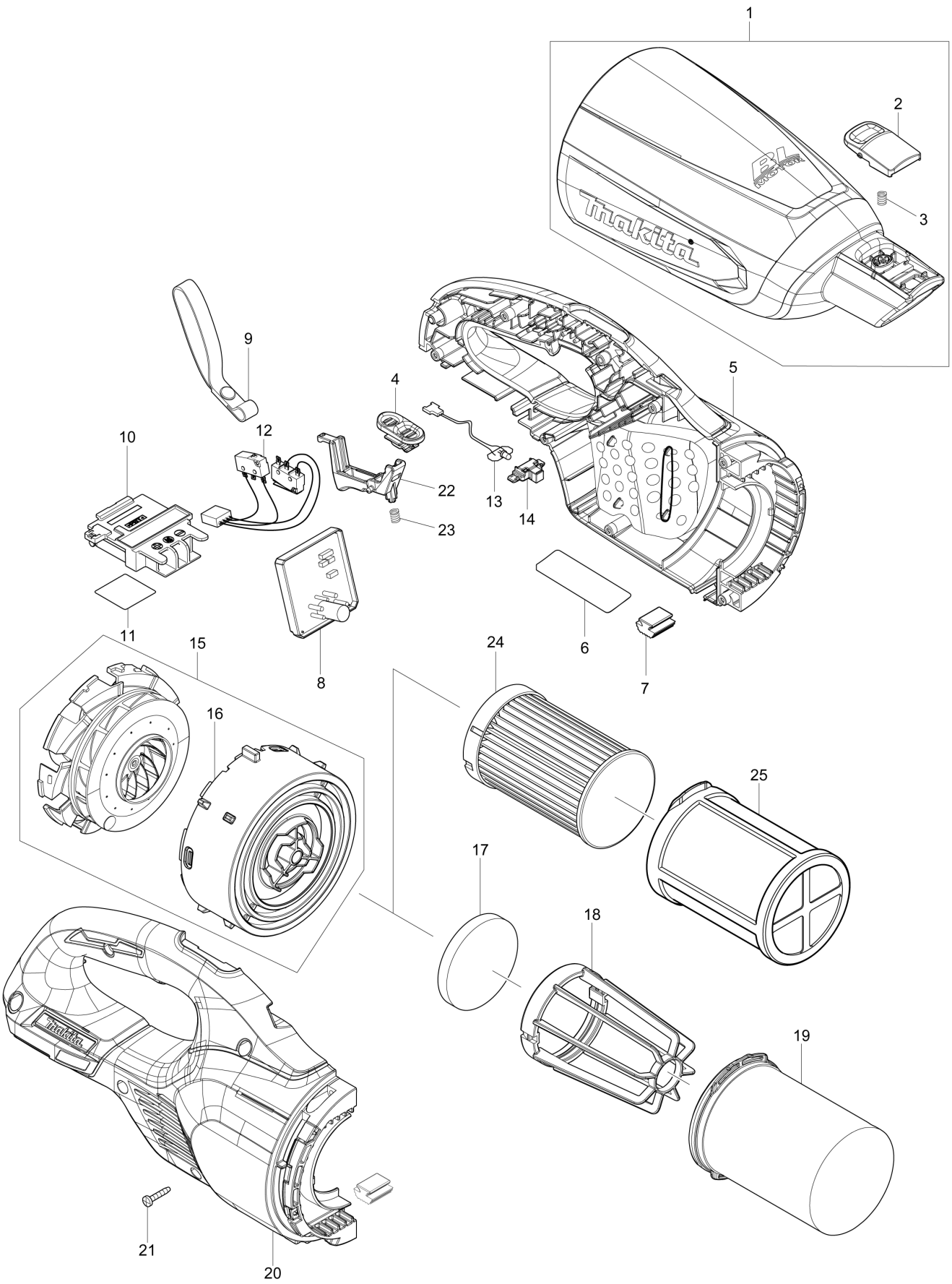

SG	SINGAPORE

DCL280F / CORDLESS CLEANER

Item	Sub	Parts No.	Parts Description	Qty	I/C	E/C No.	Close No.	Remark
001		136096-6	CAPSULE COMPLETE ASS'Y	1				
	C10	266326-2	TAPPING SCREW 4X18	1			DG793	
	C11	251530-6	TAPPING SCREW 4X18	1	S	DG793		
	C20	424208-6	VALVE	1				
	C30	941051-3	FLAT WASHER 4	1			DG793	
	D10		INC. 2,3					
002		458939-5	BUTTON A	1				
003		232485-4	COMPRESSION SPRING 5	1				
004		459326-1	SLIDE SWITCH	1				
005		183L72-3	HOUSING SET	1				
	C10	263005-3	RUBBER PIN 6	2				
	C20	422458-7	SPONGE SHEET 55-80	2				
	C30	213008-7	O RING 22.4	2				
	D10		INC. 7,20					
006		855S96-8	DCL280F NAME PLATE	1				
007		422460-0	RUBBER PLATE	2				
008		620A74-7	CONTROLLER	1				
010		643874-2	TERMINAL	1				
011		855T03-7	DCL280F SERIAL NO. LABEL	1				
012		632N57-3	SWITCH UNIT	1				
013		620A76-3	LED CIRCUIT	1			D5628	
013-1		620E82-2	LED CIRCUIT	1	<	D5628		
014		459478-8	LENS CASE	1				
015		136091-6	MOTOR ASS'Y	1				
	D10		INC. 16					
016		459322-9	FAN COVER	1				
020		183L72-3	HOUSING SET	1				
	C10	263005-3	RUBBER PIN 6	2				
	C20	422458-7	SPONGE SHEET 55-80	2				
	C30	213008-7	O RING 22.4	2				
	D10		INC. 5,7					
021		266429-2	TAPPING SCREW 3X16	7				
022		459324-5	SWITCH LEVER	1				
023		232485-4	COMPRESSION SPRING 5	1				
024		199989-8	FILTER H SET	1				
025		198750-0	PRE FILTER SET	1				
A01		123486-2	FLOOR T-NOZZLE 28 WHI	1				
	C10	451410-8	ROLLER	4				
	C20	268208-4	PIN 3	4				
	C30	424096-1	WIPER	1				
A02		451240-7	SASH NOZZLE 28 WHI	1				
A03		459353-8	PIPE	1				
A04		459354-6	NOZZLE HOLDER	1				
A05B		450128-8	BATTERY COVER	2				
A06B		***DC18RC	DC18RC FAST CHARGER	1				
	D10		COMPO-PARTS					
A07B		197422-4	BATTERY BL1860B SET	2			C5220	
A07-1B		197422-4	BATTERY BL1860B SET	2	O	C5220		

B:DCL280FRGW(H)

Interchange
O : Yes
X : No
< : the new part can be substituted for the current.
> : the current part can be substituted for the new.
S : Interchangeable as a set.