(SG) CP100D / CORDLESS MULTI CUTTER

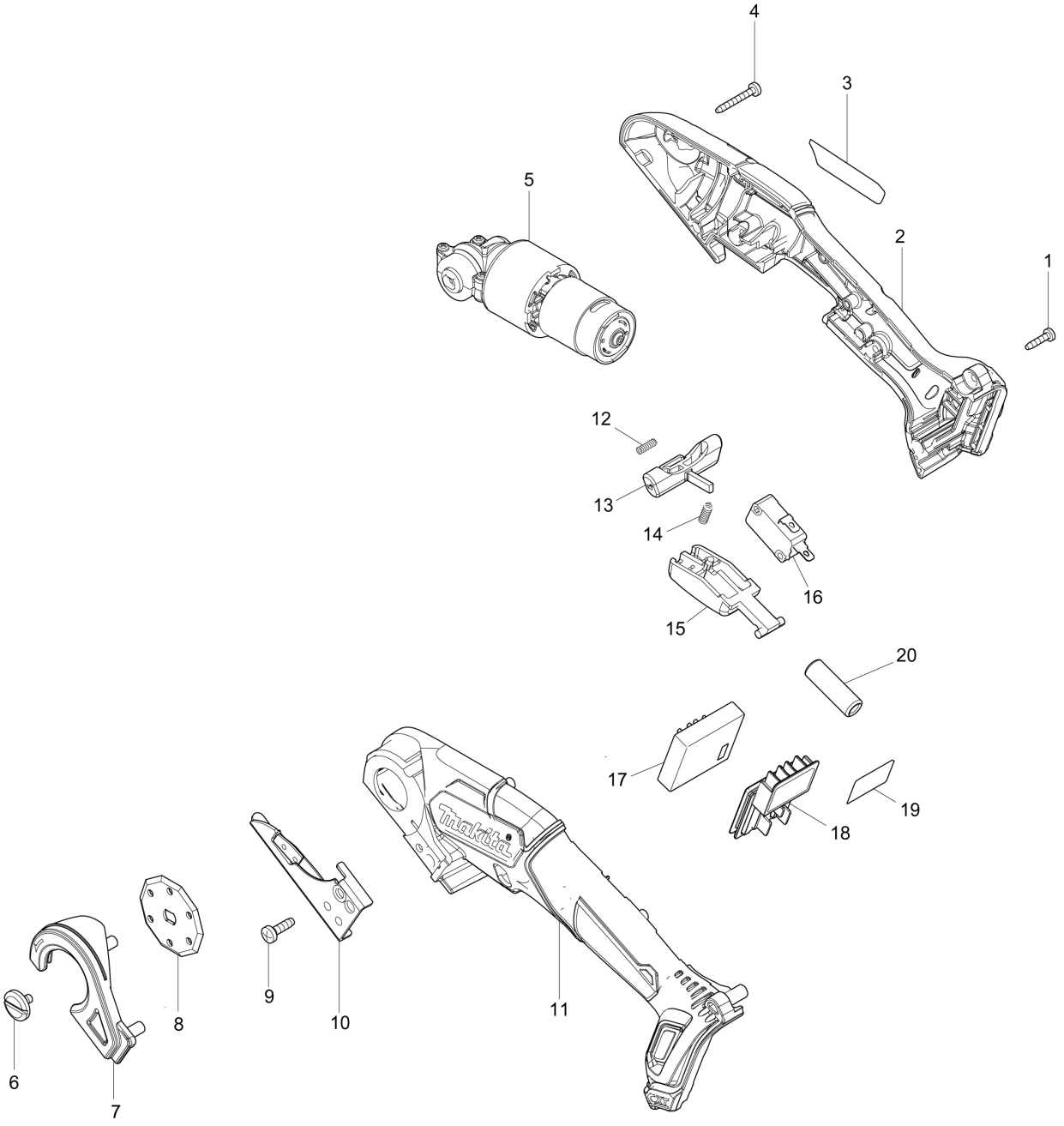

SG	SINGAPORE

CP100D / CORDLESS MULTI CUTTER

Item	Sub	Parts No.	Parts Description	Qty	I/C	E/C No.	Close No.	Remark
001		266404-8	TAPPING SCREW BIND 3X14	6				
002		183G66-8	HOUSING SET	1				
	D10		INC. 11					
003		853H52-6	CP100D NAME PLATE	1				
004		251574-6	TAPPING SCREW BIND 3X24	2				
005		126614-8	GEAR ASSEMBLY	1				
006		251571-2	- FLAT HEAD SCREW M4X8	1				
007		457828-1	BLADE COVER	1				
008		198604-1	MULTI CUTTER BLADE SET	1				
009		266385-6	TAPPING SCREW 4X14	1				
010		144620-1	UNDER BLADE COMPLETE	1				
011		183G66-8	HOUSING SET	1				
	D10		INC. 2					
012		231469-9	COMPRESSION SPRING 4	1				
013		457829-9	LOCKOFF LEVER	1				
014		233438-6	COMPRESSION SPRING 4	1				
015		457830-4	SWITCH LEVER	1				
016		650744-8	SWITCH D3V-16-3C26	1				
017		620687-8	CONTROLLER	1				
018		644813-5	TERMINAL	1				
019		853H60-7	CP100D SERIAL NO. LABEL	1				
A01B		***DC10SB	DC10SB BATTERY CHARGER	1				
	D10		COMPO-PARTS					
A02B		197396-9	BATTERY BL1021B SET	1			C5226	
A02-1B		197396-9	BATTERY BL1021B SET	1	O	C5226		
A03B		198589-1	TOOL BAG SET	1				

B:CP100DSA(H)

Interchange
O : Yes
X : No
< : the new part can be substituted for the current.
> : the current part can be substituted for the new.
S : Interchangeable as a set.