Model No. M0801 16MM HAMMER DRILL

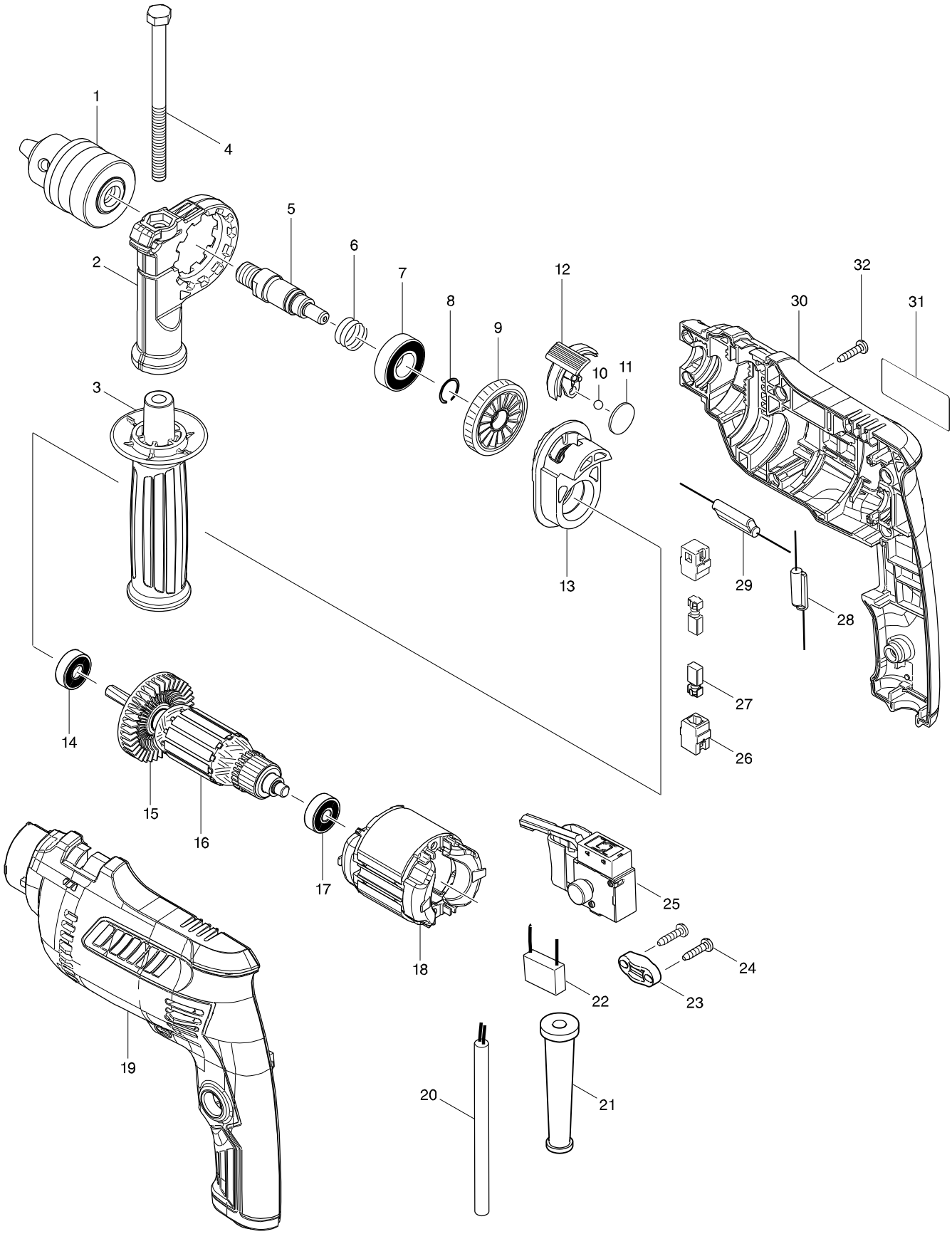

Model No. M0801 16MM HAMMER DRILL

Item	Parts No.	Description	I/C	Qty	N/O	Opt. 1	Opt. 2	Note
001	766023-5	DRILL CHUCK S13		1				
002	454126-4	GRIP BASE		1				
003	142083-5	GRIP 36 COMPLETE		1				
004	265495-6	HEX. BOLT M8X110		1				
005	326278-0	SPINDLE		1				
006	234342-2	COMPRESSION SPRING 16		1				
007	211484-9	BALL BEARING 6002LLB		1				
008	233925-5	RING SPRING 13		1				
009	227764-3	HELICAL GEAR 39		1				
010	216038-7	STEEL BALL 5.0		1				
011	346676-2	PLATE 19		1				
012	454375-3	CHANGE LEVER		1				
013	142074-6	CAM HOLDER COMPLETE		1				
C10	141994-1	CUM COMPLETE		1				
014	210044-4	BALL BEARING 608DDW		1				
015	240127-6	FAN 52		1				
016	515894-5	ARMATURE ASS'Y 240V		1				
D10		INC. 14,15,17						
017	210045-2	BALL BEARING 627DDW		1				
018	633834-2	FIELD 240V		1				
019	183B61-8	HOUSING SET		1				
C10	263002-9	RUBBER PIN 4		2				
D10		INC. 30						
020	692006-8	POWER SUPPLY CORD 1.0-2-2.0		1				
021	682569-2	CORD GUARD 8-85		1				
023	687123-7	STRAIN RELIEF		1				
024	266841-6	TAPPING SCREW 4X18		2				
025	650240-6	SWITCH FA2-4/1BEK		1				
026	643566-3	BRUSH HOLDER 5X8		2				
027	191998-3	CARBON BRUSH CB-85		1				
030	183B61-8	HOUSING SET		1				
C10	263002-9	RUBBER PIN 4		2				
D10		INC. 19						
031	851A94-2	M0801 NAME PLATE		1				
032	266841-6	TAPPING SCREW 4X18		7				
A01	763453-1	CHUCK KEY S13		1				
A02	418163-2	KEY HOLDER 10		1				
A03B	821727-7	PLASTIC CASE		1				
C10	452432-1	SLIDE LATCH		2				
C20	806G57-9	MAKITA MT LOGO LABEL		1				
A04B	D-52308	74PCS. BIT SET, MM, TYPE NZ		1				
A05B	D-53039	FILM FOR 100TH ANNIVERSARY		1				

Please order the parts with a part number.

Print Date 15/03/2017