Model No. GV6010 DISC SANDER 150MM

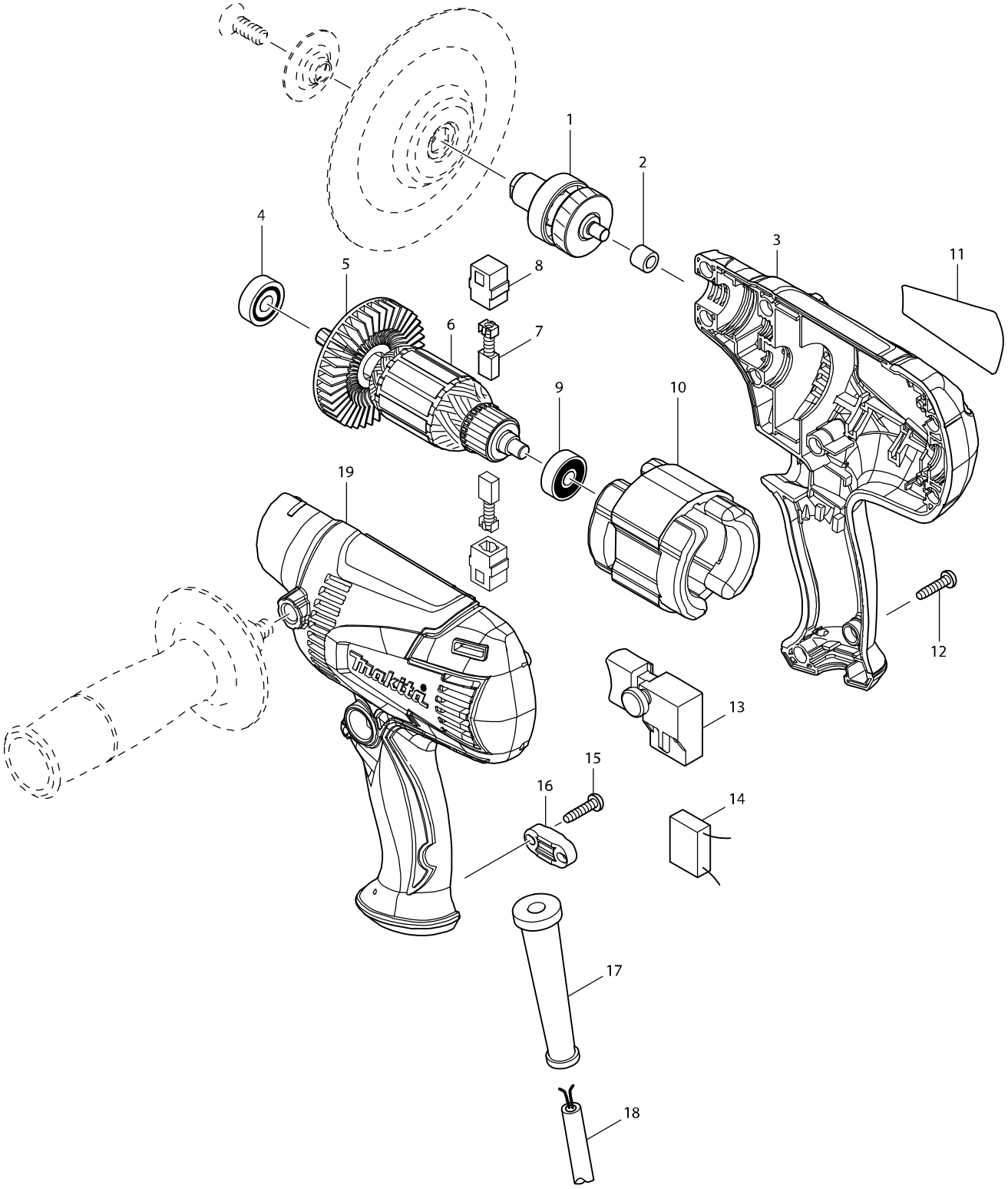

Model No. GV6010 DISC SANDER 150MM

Item	Parts No.	Description	I/C	Qty	N/O	Opt. 1	Opt. 2	Note
001	153119-5	GEAR COMPLETE		1				
002	214004-8	PLANE BEARING 6		1				
003	188564-5	HOUSING SET		1				
C10	263002-9	RUBBER PIN 4		2				
D10		INC. 19						
004	211031-6	BALL BEARING 608LLB		1				
005	241884-9	FAN 60		1				
006	515314-9	ARMATURE ASS'Y 240V		1				
D10		INC. 4,5,9						
007	191627-8	CARBON BRUSH CB-64		1				
008	643563-9	BRUSH HOLDER 5X8		2				
009	210023-2	BALL BEARING 627DDW		1				
010	526609-5	FIELD ASS'Y 240V		1				
C10	654037-5	INSULATED TERM. FT1.25-M3		2	*			
C11	654037-5	INSULATED TERM. FT1.25-M3	O	2				
011	865333-8	GV6010 NAME PLATE		1				
012	265995-6	TAPPING SCREW 4X18		9				
013	651285-7	SWITCH		1				
015	265995-6	TAPPING SCREW 4X18		2				
016	687063-9	CORD CLAMP		1				
017	682502-4	CORD GUARD 8-85		1				
018	692021-2	POWER SUPPLY CORD 1.0-2-2.5		1				
019	188564-5	HOUSING SET		1				
C10	263002-9	RUBBER PIN 4		2				
D10		INC. 3						
A01	152491-2	GRIP 36 COMPLETE		1				
A02	743025-8	PLASTIC PAD 120		1				
A03	253951-8	WASHER 10		1				
A04	265812-0	HEX. SOCKET HEAD BOLT M8X20		1				
A05	410047-0	WRENCH HOLDER 5.6		1				
A06	794088-7	ABRASIVE DISC 150 #80		1				
A07	783203-8	HEX. WRENCH 5		1				

Please order the parts with a part number.

Print Date 22/02/2017