Model No. GD0601 DIE GRINDER

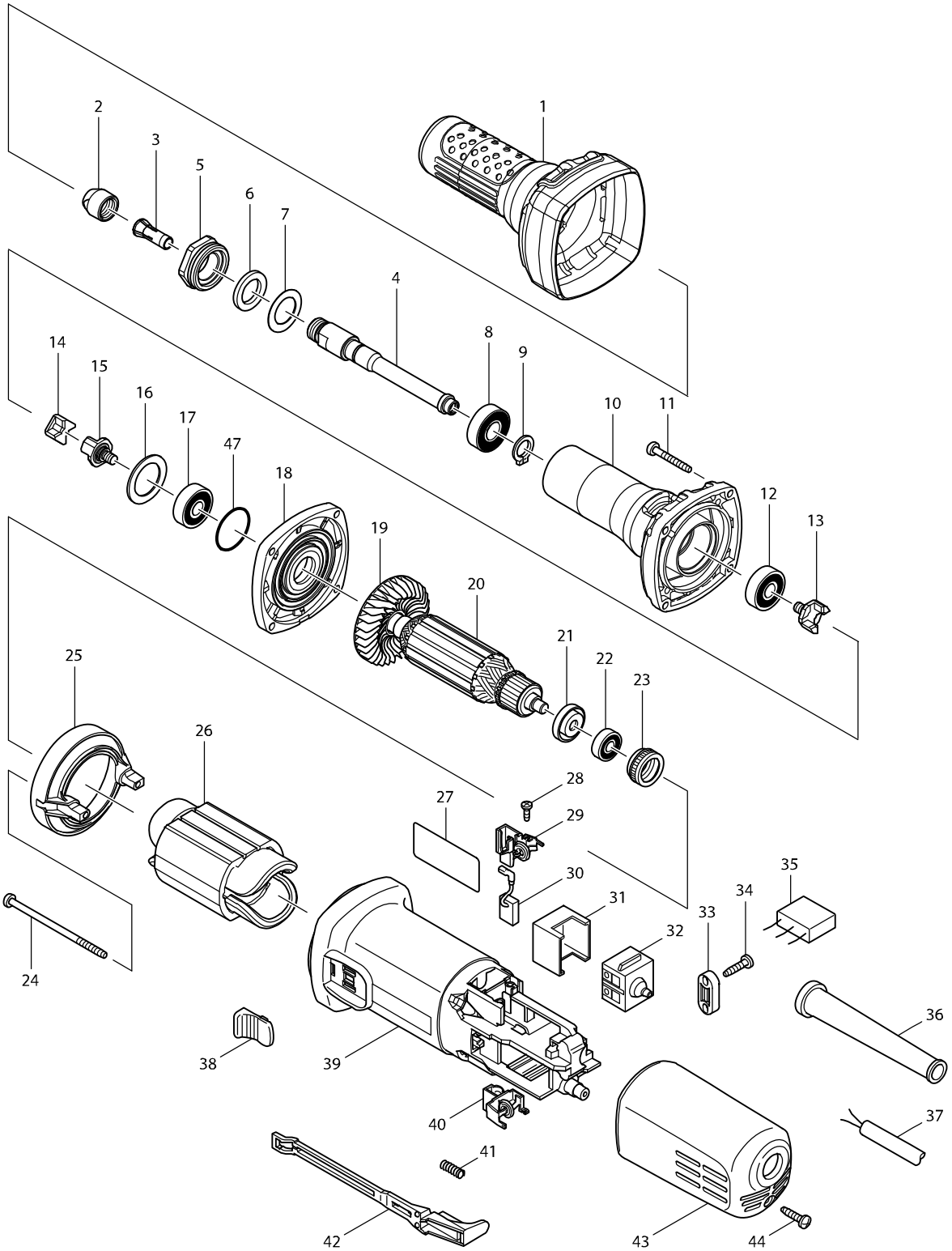

Model No. GD0601 DIE GRINDER

Item	Parts No.	Description	I/C	Qty	N/O	Opt. 1	Opt. 2	Note
001	421943-7	INSULATION COVER		1				
002	763664-8	COLLET NUT 6		1				
003	763620-8	COLLET CONE 6MM		1				
004	324638-0	SPINDLE		1				
005	317999-5	BEARING RETAINER		1				
006	443124-3	FELT RING 17		1				
007	267329-9	FLAT WASHER 18		1				
008	210106-8	BALL BEARING 6001LLB		1				
009	961052-5	RETAINING RING S-12		1				
010	318000-9	BARREL		1				
011	266361-0	TAPPING SCREW 4X30		4				
012	210042-8	BALL BEARING 629LLB		1				
013	324639-8	COUPLING		1				
014	421942-9	SPACER		1				
015	324639-8	COUPLING		1				
016	267126-3	FLAT WASHER 22		1				
017	210042-8	BALL BEARING 629LLB		1				
018	317821-6	GEAR HOUSING COVER		1				
019	240076-7	FAN 56		1				
D10		INC. 19,21,22						
020A	515679-9	ARMATURE ASS'Y 240V		1				
020G	518883-9	ARMATURE ASS'Y 115V		1				
021	681636-0	INSULATION WASHER		1				
022	210034-7	BALL BEARING 607LLB		1				
023	421868-5	LABYRINTH RUBBER RING 19		1				
024	266345-8	TAPPING SCREW 4X80		2				
025	418770-1	BAFFLE PLATE		1				
026A	621724-1	FIELD 230-240V		1				
026G	627074-2	FIELD 115V		1				
027	863144-5	GD0601 NAME PLATE		1				
028	266007-8	TAPPING SCREW BIND PT 3X10		4				
029	643760-7	BRUSH HOLDER		1				
030	194074-2	CARBON BRUSH CB-325		1				
031	418729-8	SPACER		1				
032	650560-8	SWITCH DPX-2110-R		1	*			
032-1	651947-7	SWITCH 1247.0302	O	1				
033	687123-7	STRAIN RELIEF		1				
034	266326-2	TAPPING SCREW 4X18		2				
036	682559-5	CORD GUARD 8		1				
037A	692021-2	POWER SUPPLY CORD 1.0-2-2.5		1				
037G	664891-9	POWER SUPPLY CORD AWG#18-2-2.!		1				
038	419566-3	SWITCH KNOB		1				
039-1	418725-6	MOTOR HOUSING		1				
040	643760-7	BRUSH HOLDER		1				
041	233121-5	COMPRESSION SPRING 4		1				
042	418728-0	SWITCH LEVER B		1				
043	418726-4	REAR COVER		1				
044	266326-2	TAPPING SCREW 4X18		1				

Please order the parts with a part number.

Print Date 22/02/2017

Model No. GD0601 DIE GRINDER

Item	Parts No.	Description	I/C	Qty	N/O	Opt. 1	Opt. 2	Note
047	213445-5	O-RING 26		1				
A01	781039-9	WRENCH 13		2				

Please order the parts with a part number.

Print Date 22/02/2017