Model No. GA4040C 100MM ANGLE GRINDER

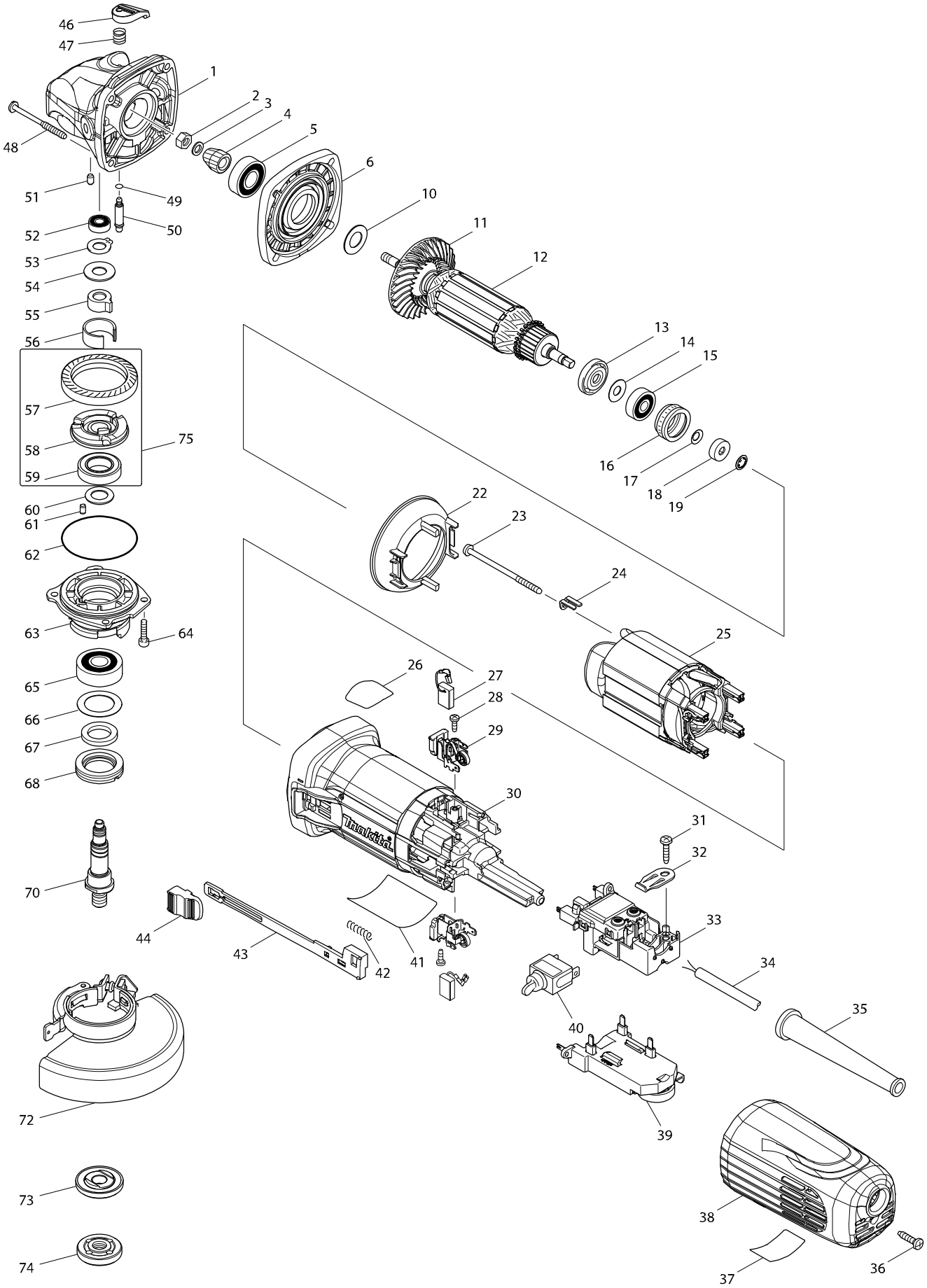

Model No. GA4040C 100MM ANGLE GRINDER

Item	Parts No.	Description	I/C	Qty	N/O	Opt. 1	Opt. 2	Note
001	168705-9	GEAR HOUSING COMPLETE		1	*			
001-1	319310-7	GEAR HOUSING	<	1				
002	252186-8	HEX. NUT M6		1				
003	253077-6	FLAT WASHER 6		1				
004	227591-8	SPIRAL BEVEL GEAR 10		1				
005	211142-7	BALL BEARING 6001LLB		1				
006	318835-8	GEAR HOUSING COVER		1	*			
006-1	141981-0	GEAR HOUSING COVER COMPLETE	<	1				
010	253084-9	FLAT WASHER 12		1				
011	240134-9	FAN 60		1				
012	515373-3	ARMATURE ASS'Y 220-240V		1				
D10		INC. 11,13-15						
013	681656-4	INSULATION WASHER		1				
014	253823-7	FLAT WASHER 7		1				
015	210027-4	BALL BEARING 627DDW		1				
016	421738-8	LABYRINTH RUBBER RING 22		1				
017	267756-0	WAVE WASHER 6		1				
018	688117-5	MAGNET SLEEVE		1				
019	259039-2	SELF LOCK 6		1				
022	453367-9	BUFFLE PLATE		1				
023	266258-3	TAPPING SCREW 4X70		2				
024	344871-8	RETAINER		2				
025	626653-3	FIELD 220-240V		1				
026	898443-6	SJS2 MARK LABEL		1				
027	191978-9	A.C. CARBON BRUSH CB-318		1				
028	266007-8	TAPPING SCREW BIND PT 3X10		2				
029	643769-9	BRUSH HOLDER		2	*			
029-1	643770-4	BRUSH HOLDER	<	2				
030	453366-1	MOTOR HOUSING		1				
031	266326-2	TAPPING SCREW 4X18		1				
032	687169-3	STRAIN RELIEF		1				
033	638948-2	SWITCH BLOCK		1				
034	692021-2	POWER SUPPLY CORD 1.0-2-2.5		1				
035	682559-5	CORD GUARD 8		1				
036	266326-2	TAPPING SCREW 4X18		1				
037	898444-4	INDICATION LABEL		1				
038	453365-3	REAR COVER C		1				
039	620127-6	CONTROLLER		1				
040	651418-4	SWITCH ST115A-40		1				
041	897074-8	GA4040C NAME PLATE		1	*			
041-1	897074-8	GA4040C NAME PLATE	<	1				
042	233071-4	COMPRESSION SPRING 4		1				
043	453847-5	SWITCH LEVER		1				
044	453368-7	SWITCH KNOB		1				
046	453369-5	PIN CAP		1				
047	234057-1	COMPRESSION SPRING 8		1				
048	266361-0	TAPPING SCREW 4X30		4				
049	213032-0	O RING 4		1				

Model No. GA4040C 100MM ANGLE GRINDER

Item	Parts No.	Description	I/C	Qty	N/O	Opt. 1	Opt. 2	Note
050	256535-1	SHOULDER PIN 6		1				
051	263002-9	RUBBER PIN 4		1				
052	210006-2	BALL BEARING 696ZZ		1				
053	961005-4	RETAINING RING S-9		1				
054	253180-3	FLAT WASHER 10		1				
055	310508-9	JOINT SLEEVE		1	*			
055-1	310577-0	JOINT SLEEVE	<	1	*			
055-2	310683-1	JOINT SLEEVE	<	1				
056	346556-2	C TYPE PLATE		1				
057	227592-6	SPIRAL BEVEL GEAR 38		1				
058	313228-4	COUPLING		1				
059	210302-8	BALL BEARING 6903ZZ		1				
060	253744-3	FLAT WASHER 12		1				
061	263002-9	RUBBER PIN 4		1				
062	213641-5	O RING 51		1				
063	318837-4	BEARING BOX		1				
064	265490-6	HEX. SOCKET HEAD BOLT M4X16		4				
065	211129-9	BALL BEARING 6201DDW		1				
066	267279-8	FLAT WASHER 21		1				
067	443124-3	FELT RING 17		1				
068	285854-8	BEARING RETAINER 20-33		1				
070	326129-7	SPINDLE		1				
072	122893-6	TOOLLESS WHEEL COVER 100K ASS		1				
C10	213009-5	O RING 4		1				
C20	265180-1	PAN HEAD SCREW M5X16		1				
073	224314-5	INNER FLANGE 30		1				
074	224559-5	LOCK NUT 10-30		1				
075	135555-7	COUPLING ASS'Y		1				
D10		INC. 57-59						
076	892272-9	CLEAR LABEL		1				
A01	153489-2	GRIP 36 COMPLETE		1				
A02	782401-1	LOCK NUT WRENCH 20		1				
A03	A-80852	GRINDING WHEEL 100X6X16		1				